Operations in Order	SIGNAL GENERATOR		RECEIVER		
	Output Connections to Receiver	Dial Setting	Dial Setting	Control Settings	Adjust Compensators in order
1	Ant. Section of Tuning Cond.	455 K. C.	540 K. C. Tuning Cond. Closed	Vol Max. Range Switch Brdcst.	16A, 16B, 22A, 22B, 25A
2	Loop see above instructions	1600 K. C.	1600 K. C.	Vol Max. Range Switch Brdcst.	6B Tuning Condenser
3	Loop see above instructions	1500 K. C.	1500 K. C.	Vol Max. Range Switch Brdcst.	6A Tuning Condenser

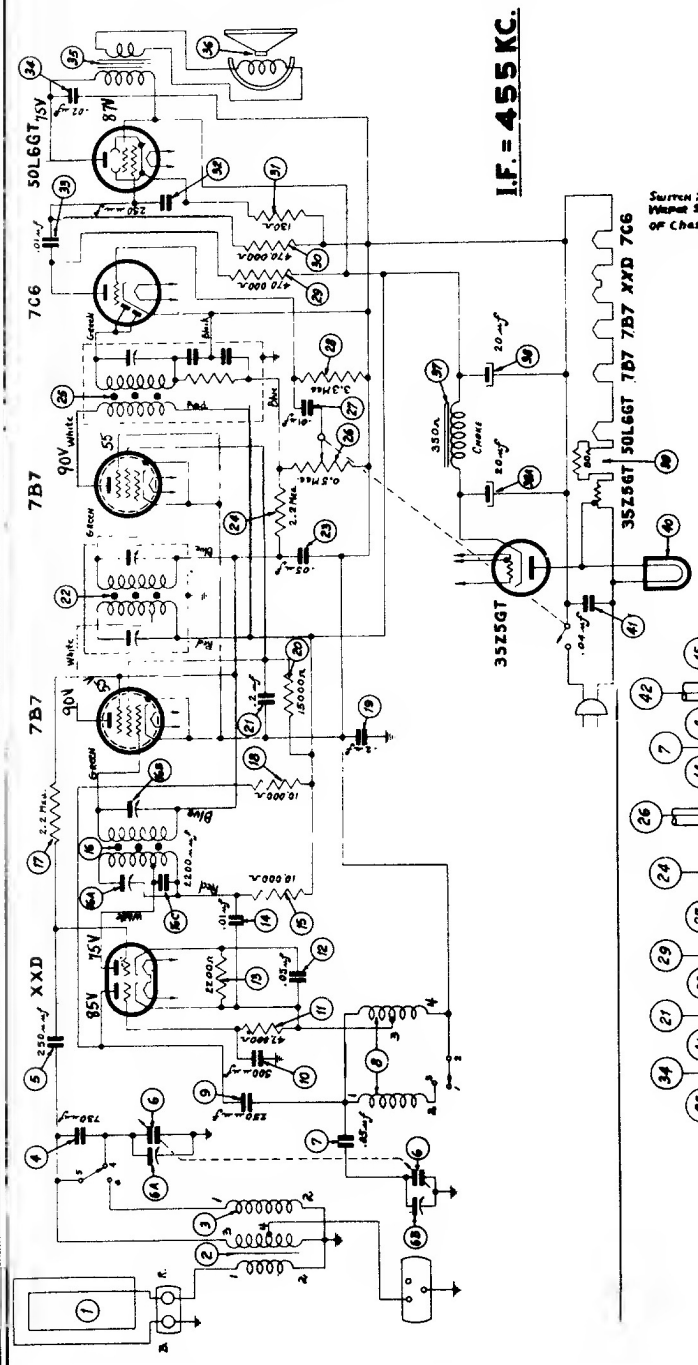

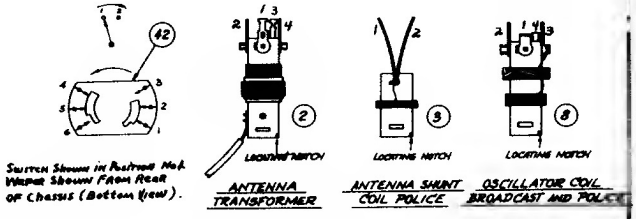

PHILCO
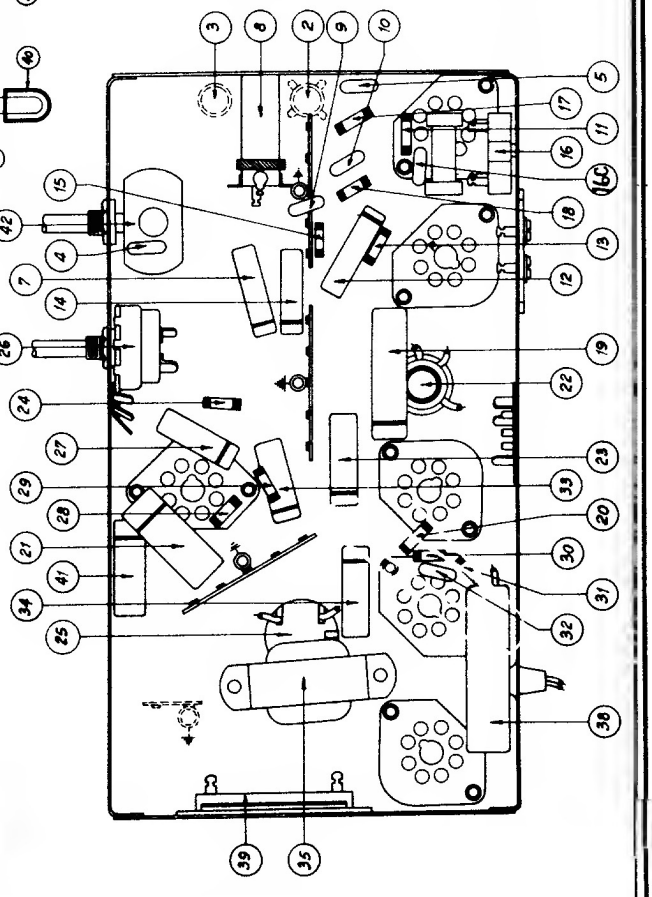
Model 41-258