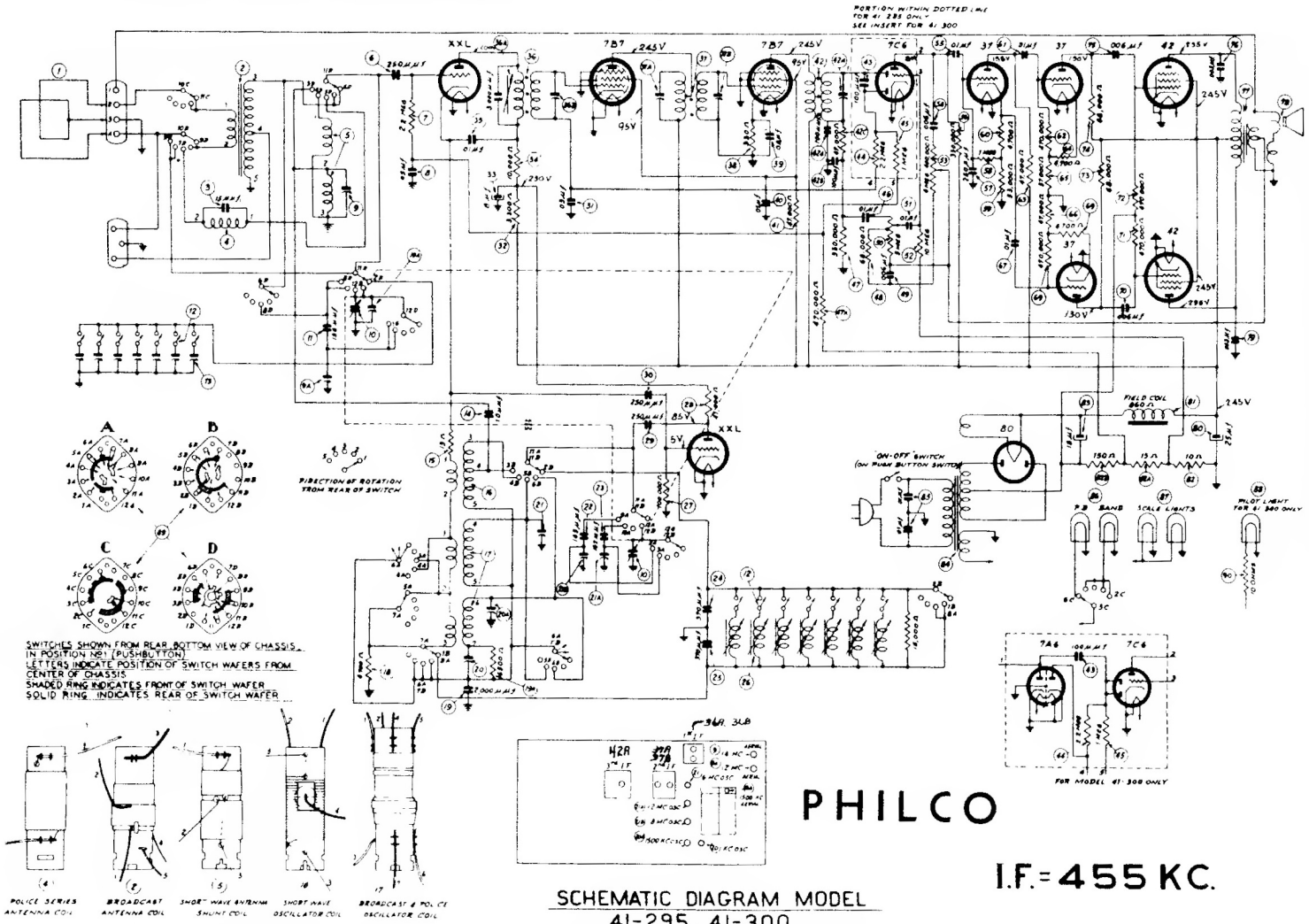

SCHEMATIC DIAGRAM MODEL
41-295, 41-300

THE VOLTAGES INDICATED WERE MEASURED WITH A PHILCO MODEL 027 VOLTMETER (1000 OHMS PER VOLT) - -POWER SUPPLY 115 VOLTS 60 CYCLE—VOLUME CONTROL MINIMUM NO SIGNAL BEING RECEIVED—RANGE SWITCH "BROADCAST"

THE ABOVE DIAGRAM IS THE COMPLETE ELECTRICAL CIRCUIT FOR MODEL 41-295 THE SAME GENERAL CIRCUIT IS ALSO USED IN MODEL 41-300 WITH THE EXCEPTION OF THE ADDITIONAL 7A6 TUBE IN THE 2ND DETECTOR A V C CIRCUIT THE WIRING OF THE ADDITIONAL TUBE IS SHOWN IN THE LOWER RIGHT CORNER OF THE SCHEMATIC.