## SCHEMATIC DIAGRAM — MODELS 41-842, 41-843 AND 41-844

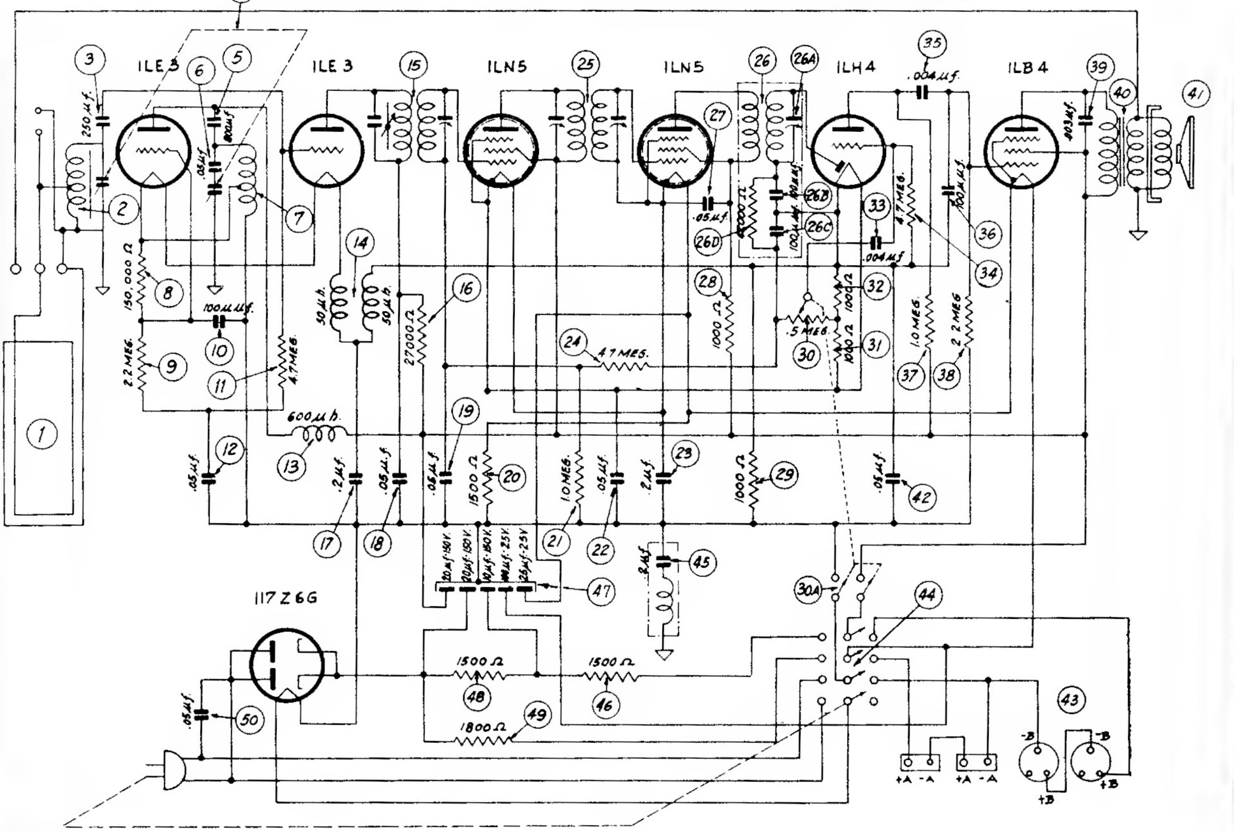


## MODELS 41-842, 41-843, 41-844

These models may be adjusted when operated by battery or 115 volts A.C.-D.C. power.

| Operations in Order | SIGNAL GENERATOR: Output Connections to Receiver | SIGNAL GENERATOR: Dial Setting | RECEIVER: Dial Setting | RECEIVER: Control Setting | RECEIVER: Adjust Compensators |
|---|---|---|---|---|---|
| 1 | See Paragraph on Signal Generator above | 455 K.C. | 540 K.C. | Vol. Max. | 26A, 25A, 25B, 15A, 15B |
| 2 | Use Loop on Generator as above | 1500 K.C. | 1500 K.C. | Vol. Max. | 4B, 4A |

# PHILCO

*Models 41-842,*

*41-843, 41-844*

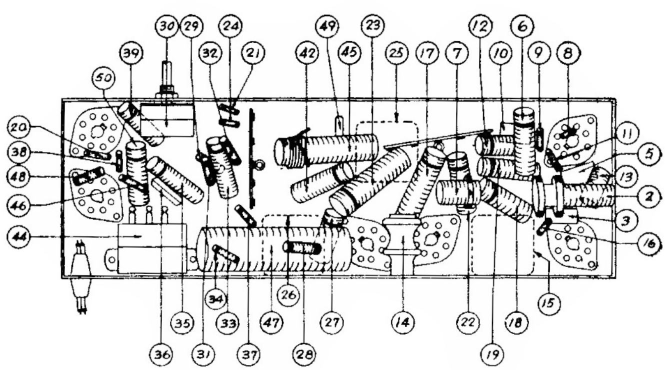

LOCATION OF PARTS — UNDERSIDE OF CHASSIS