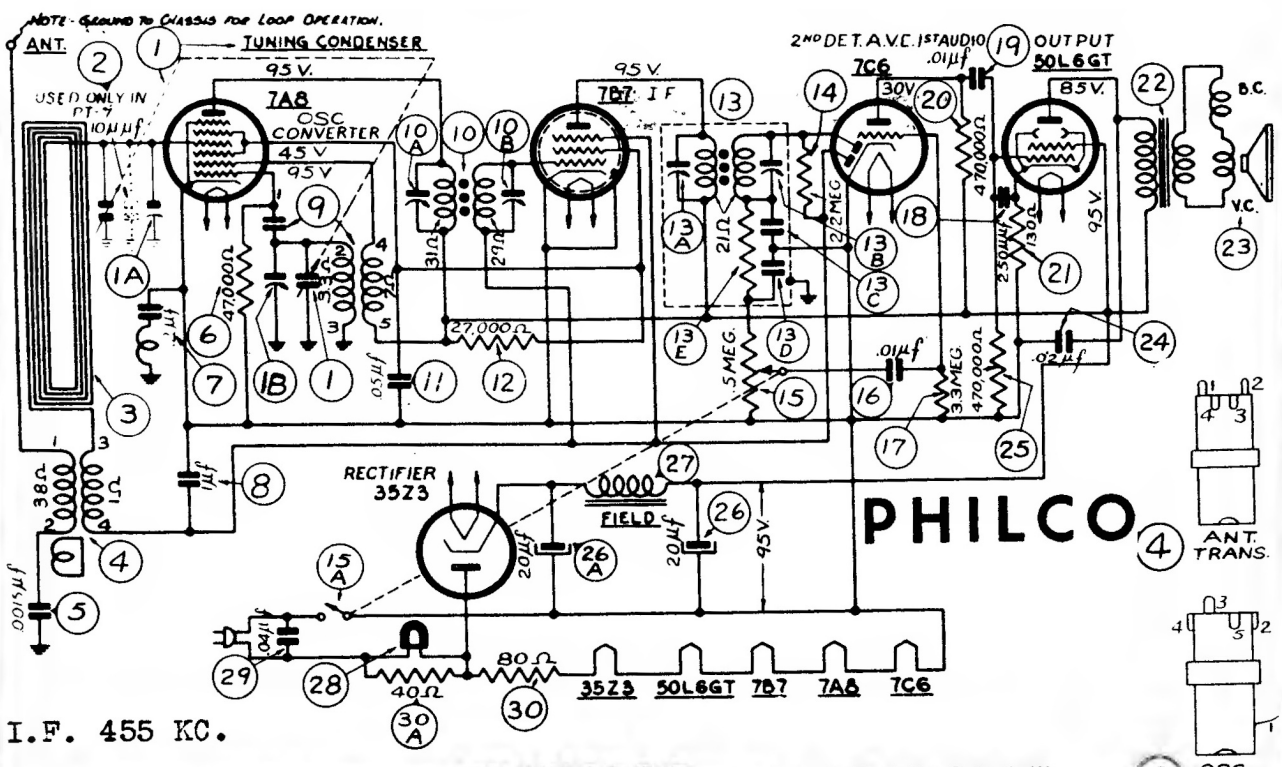

Models 42-PT-2, Code 121-122; 42-PT-4, Code 121-122; 42-PT-T, Code 121-122

D. C. Voltages indicated at the tube elements in the above diagram were measured with a 1000 ohms per voltmeter.

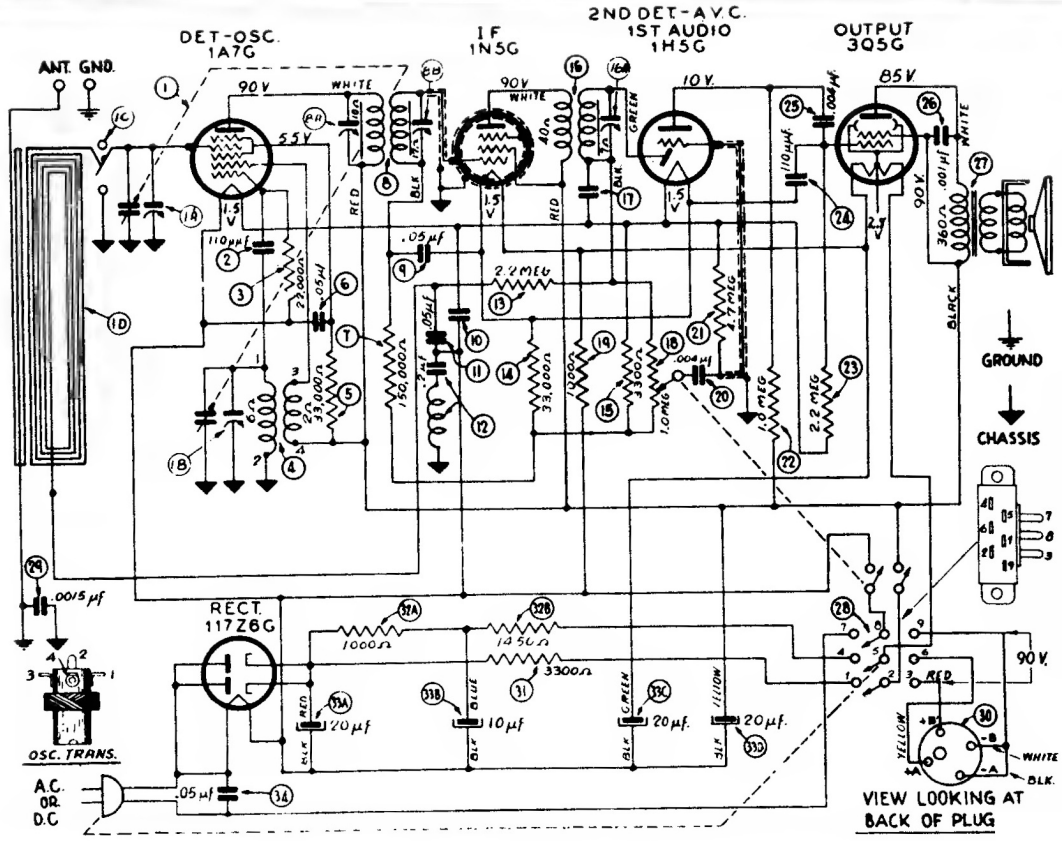

SCHEMATIC DIAGRAM—MODEL 42-PT-87, 42-PT-88

SOCKET VOLTAGES INDICATED ON THE DIAGRAM WERE MEASURED WITH A 1000 OHM PER VOLTMETER.