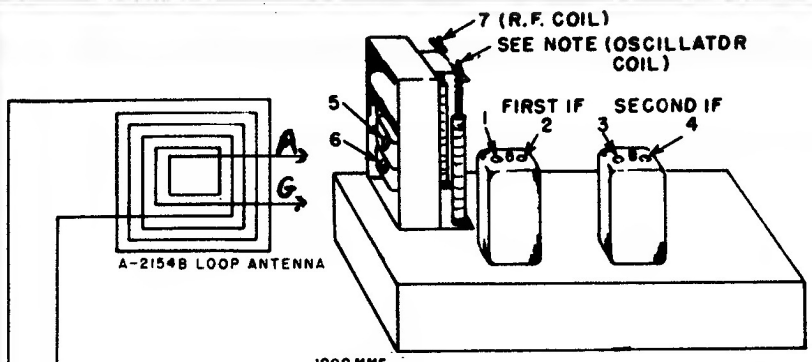

MECHANICAL ALIGNMENT:-

1. Rotate shaft of tuning unit until carriage is against top stop position.
2. Space oscillator coil slug 1-5/32" out from top of oscillator coil form.
3. Space R.F. coil slug 1-29/64" out from top end of R.F. coil winding. (Note:-The distance 1 and 2 should be measured from mounted end of the slug)
4. Adjust screw on trimmer of wave trap towards open position so that condenser plates are open at least 1/32".

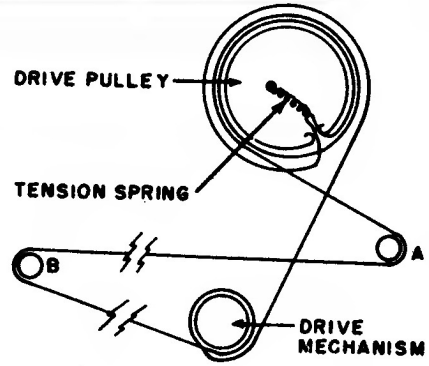

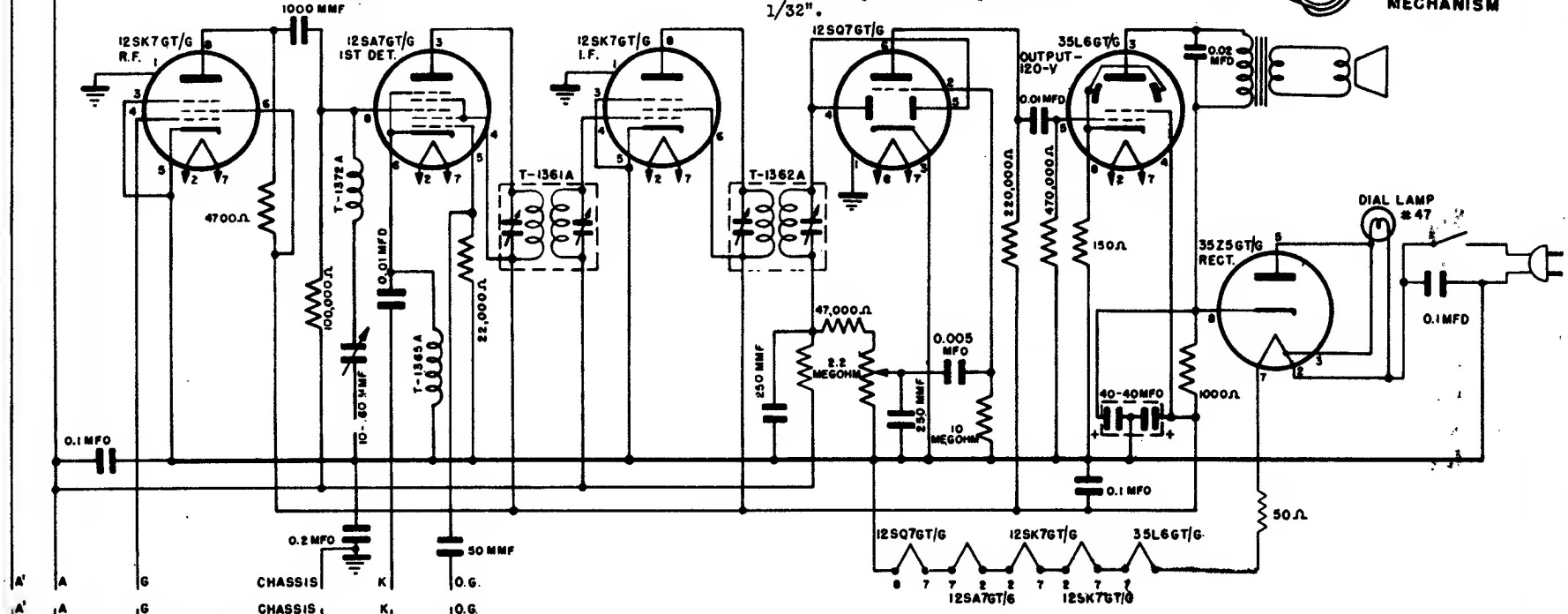

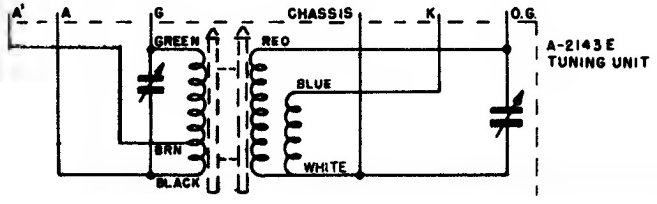

Chancellor Model No. 6W

Radionic Equipment Co.