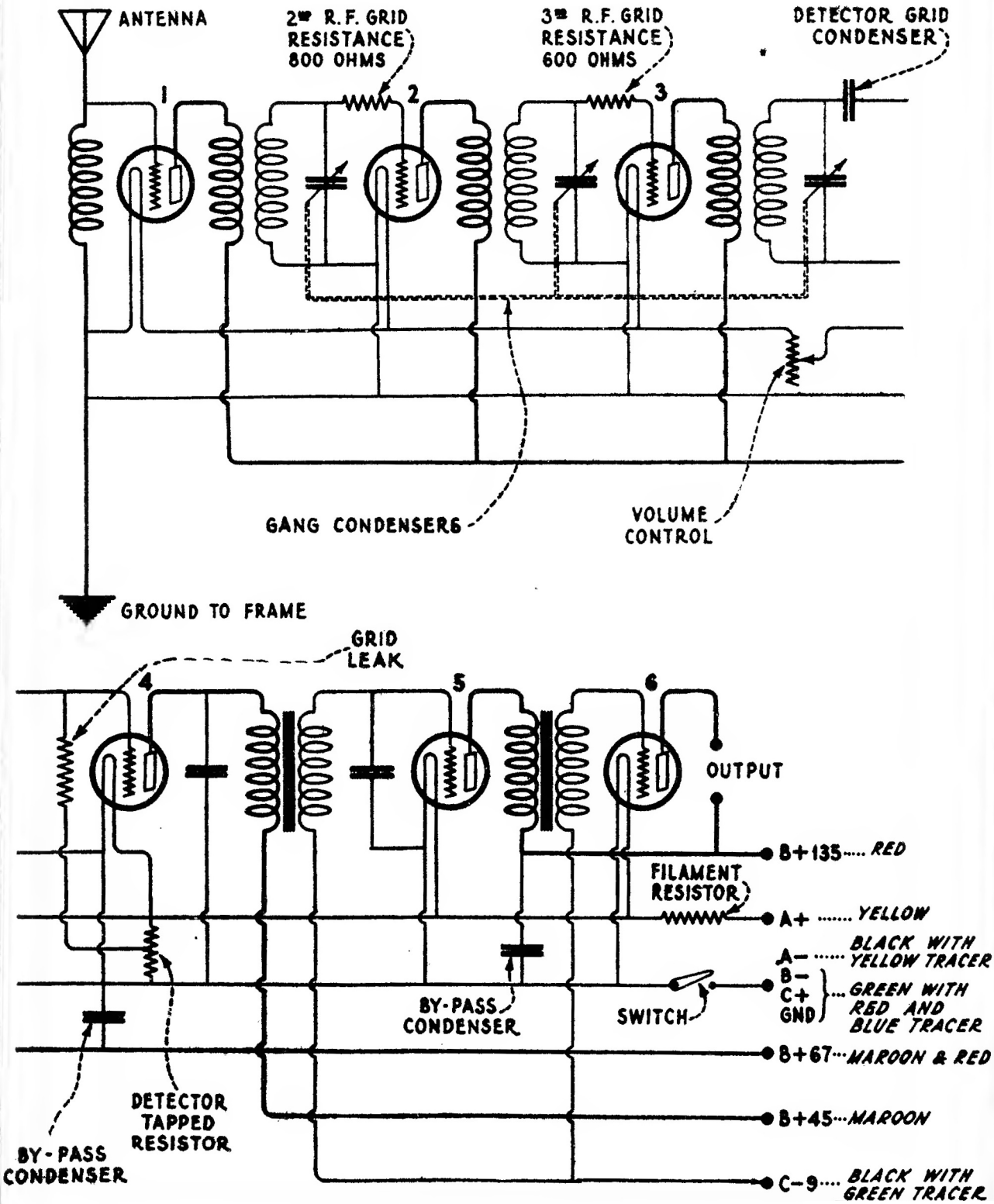RCA RADIOLA 16