MODEL K-105

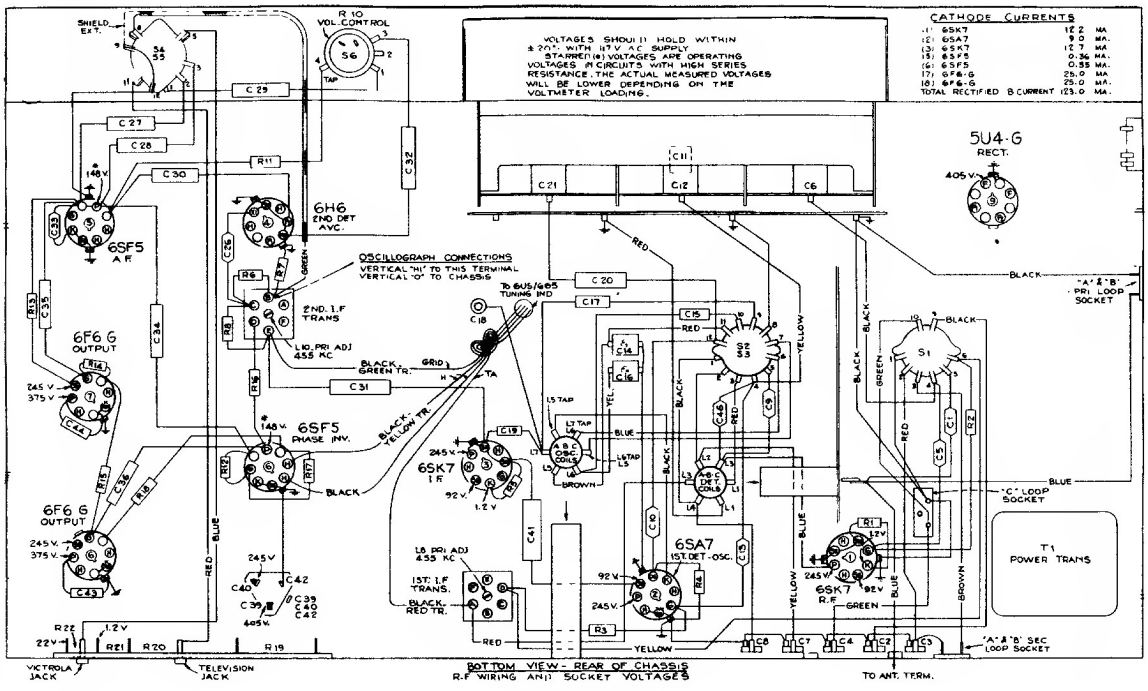

CATHODE CURRENTS
(1) 6SK7 12.2 MA
(2) 6SA7 9.0 MA.
(3) 6SK7 12.7 MA
(5) 6SF5 0.36 MA.
(6) 6SF5 0.55 MA.
(7) 6F6-G 25.0 MA
(8) 6F6-G 25.0 MA.
TOTAL RECTIFIED B CURRENT 123.0 MA.
VOLTAGES SHOULD HOLD WITHIN ±20% WITH 117 V AC SUPPLY
STARRED (*) VOLTAGES ARE OPERATING VOLTAGES IN CIRCUITS WITH HIGH SERIES RESISTANCE. THE ACTUAL MEASURED VOLTAGES WILL BE LOWER DEPENDING ON THE VOLTMETER LOADING.
R 10 VOL. CONTROL
SHIELD EXT.
6H6 2ND DET AVC.
6SF5 A.F.
6F6 G OUTPUT
6SF5 PHASE INV.
6SK7 I.F.
6SA7 1ST. DET.-OSC.
6SK7 R.F.
5U4-G RECT.
OSCILLOGRAPH CONNECTIONS
VERTICAL "H" TO THIS TERMINAL
VERTICAL "O" TO CHASSIS
2ND. I.F. TRANS
L10 PRI ADJ 455 KC
L8 PRI ADJ 455 KC
1ST. I.F. TRANS.
BLACK, GREEN TR.
BLACK, YELLOW TR.
BLACK, RED TR.
TO 6U5/6G5 TUNING IND
"A" & "B" PRI LOOP SOCKET
"C" LOOP SOCKET
"A" & "B" SEC LOOP SOCKET
T1 POWER TRANS
VICTROLA JACK
TELEVISION JACK
TO ANT. TERM.
BOTTOM VIEW - REAR OF CHASSIS
R.F. WIRING AND SOCKET VOLTAGES

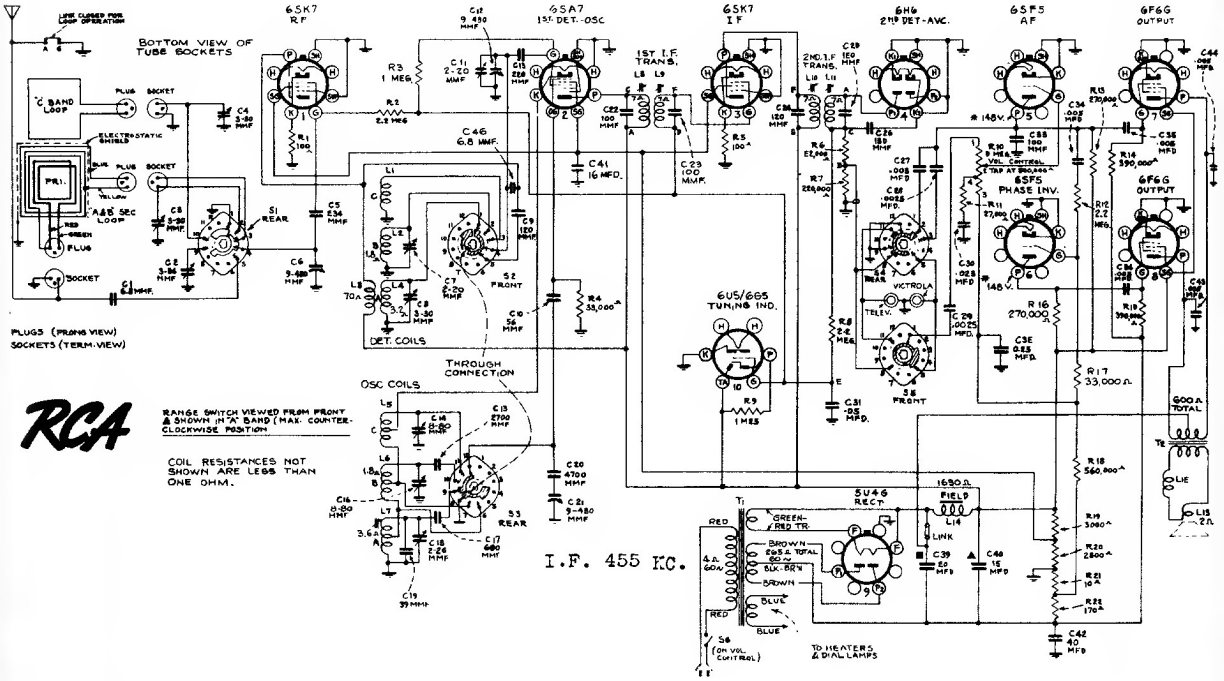

BOTTOM VIEW OF TUBE SOCKETS
6SK7 R.F.
6SA7 1ST. DET.-OSC
6SK7 I.F.
6H6 2ND DET-AVC.
6SF5 A.F.
6F6G OUTPUT
6SF5 PHASE INV.
6F6G OUTPUT
6U5/6G5 TUNING IND.
5U4G RECT.
"C" BAND LOOP
"A" & "B" SEC LOOP
ELECTROSTATIC SHIELD
PLUGS (PRONG VIEW)
SOCKETS (TERM. VIEW)
THROUGH CONNECTION
OSC COILS
DET. COILS
RANGE SWITCH VIEWED FROM FRONT & SHOWN IN "A" BAND (MAX. COUNTER-CLOCKWISE POSITION
COIL RESISTANCES NOT SHOWN ARE LESS THAN ONE OHM.
RCA
I.F. 455 KC.
TO HEATERS & DIAL LAMPS