Sears, Roebuck & Co. Sets Nos. 25 and 27

Chassis 478.238

7 TUBE AC-DC, AM-FM, SUPERHETERODYNE

Power Supply
105-125 V. D.C.
or 105-125 V., 50-60 cycles A.C.

Frequency Range
AM—530 Kc. to 1630 Kc.
FM— 87 Mc. to 109 Mc.

Intermediate Frequency
AM—455 Kc.
FM—10.7 Mc.

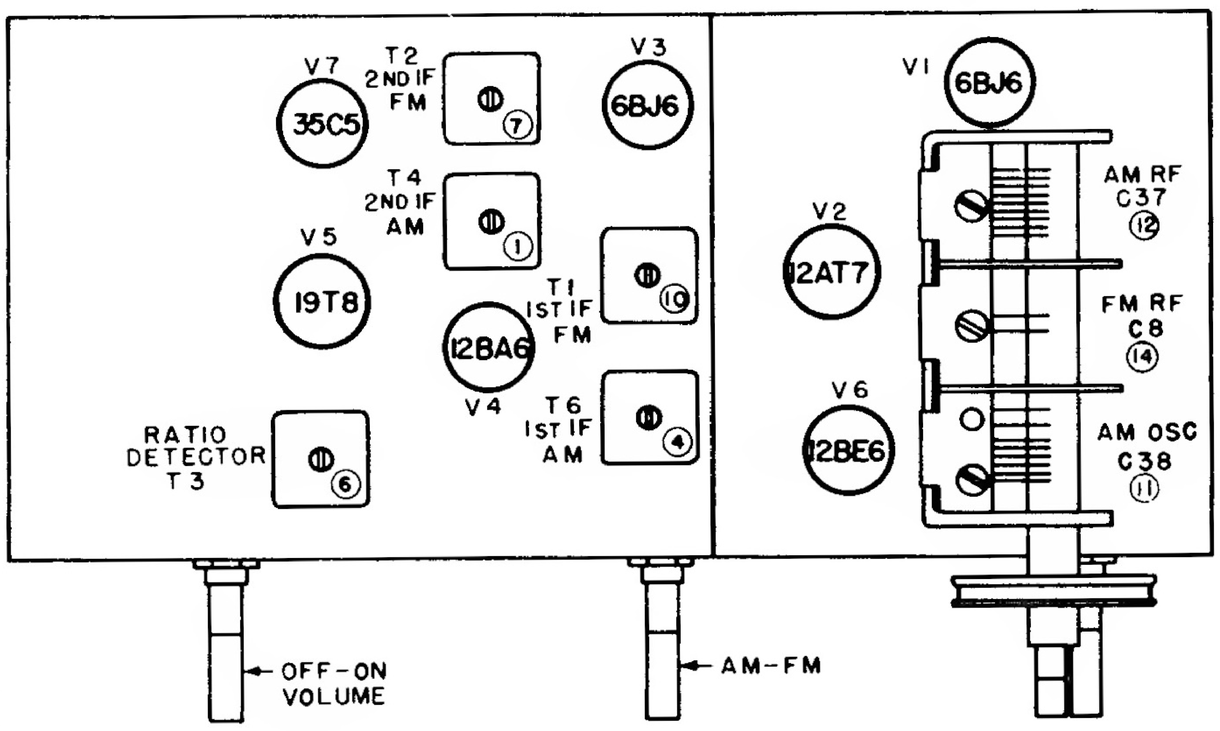

TOP VIEW OF CHASSIS

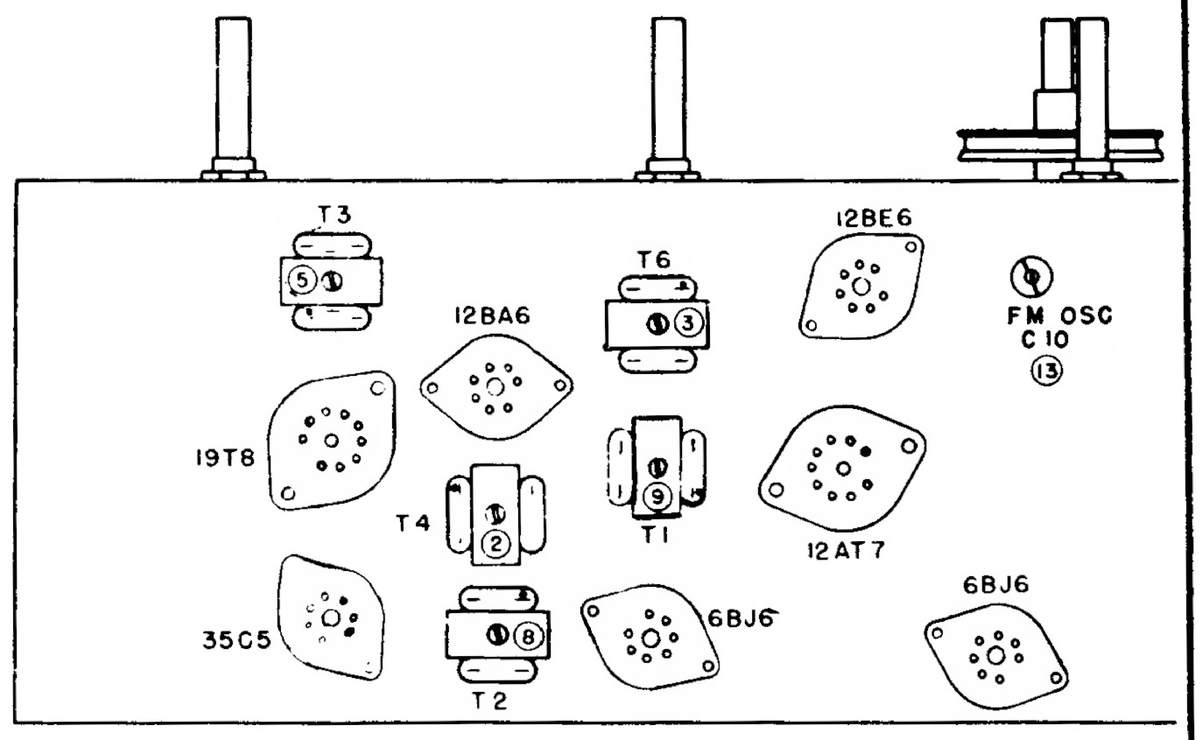

BOTTOM VIEW OF CHASSIS

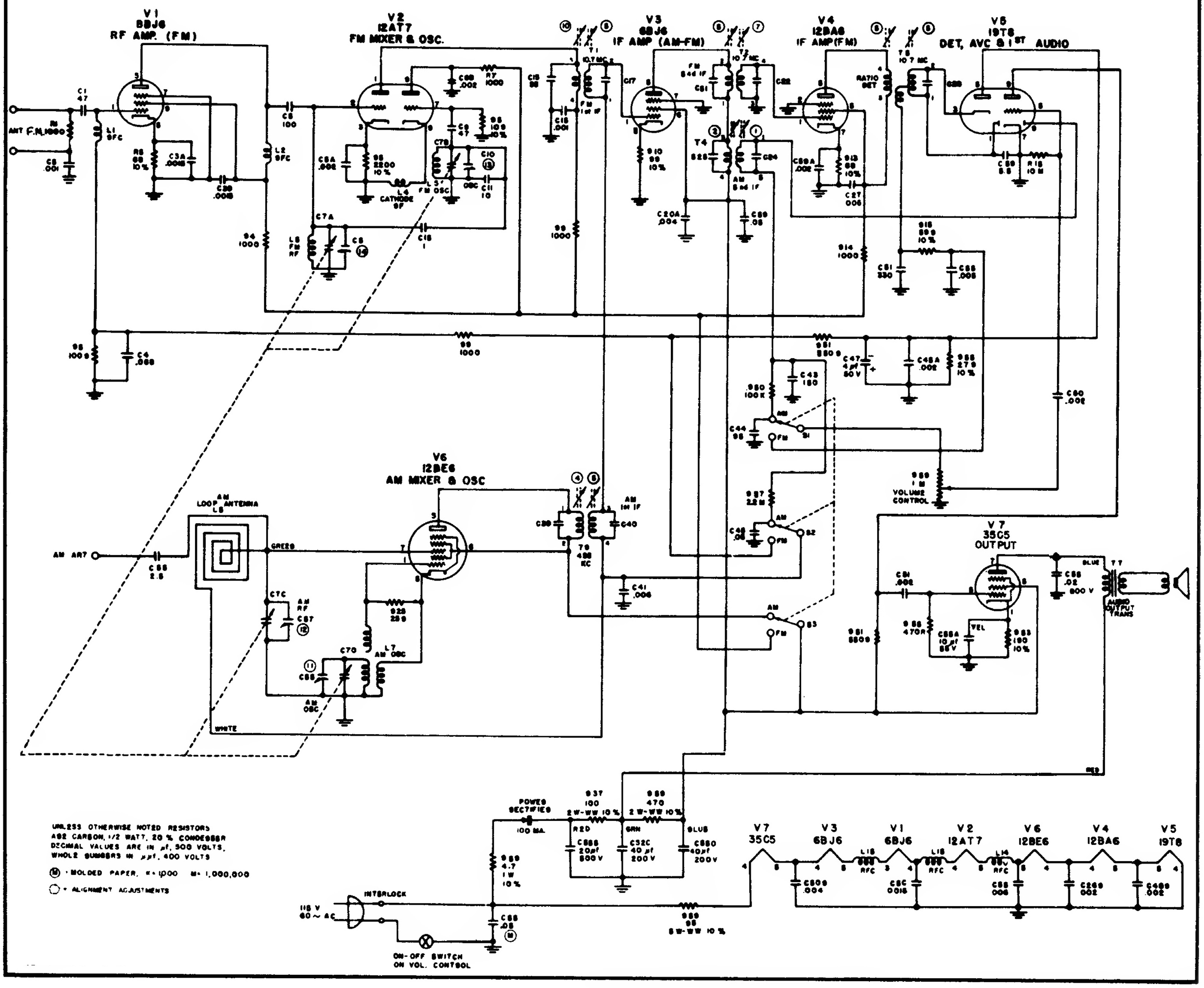

UNLESS OTHERWISE NOTED RESISTORS ARE CARBON, 1/2 WATT, 20 % CONDENSER DECIMAL VALUES ARE IN µf, 500 VOLTS, WHOLE NUMBERS IN µµf, 400 VOLTS

Ⓜ = MOLDED PAPER, K = 1000 M = 1,000,000

○ = ALIGNMENT ADJUSTMENTS