Sentinel Radio

MODELS 309-W, 309-I, 309-N, 309-R

AC-DC SUPERHETERODYNE RECEIVER

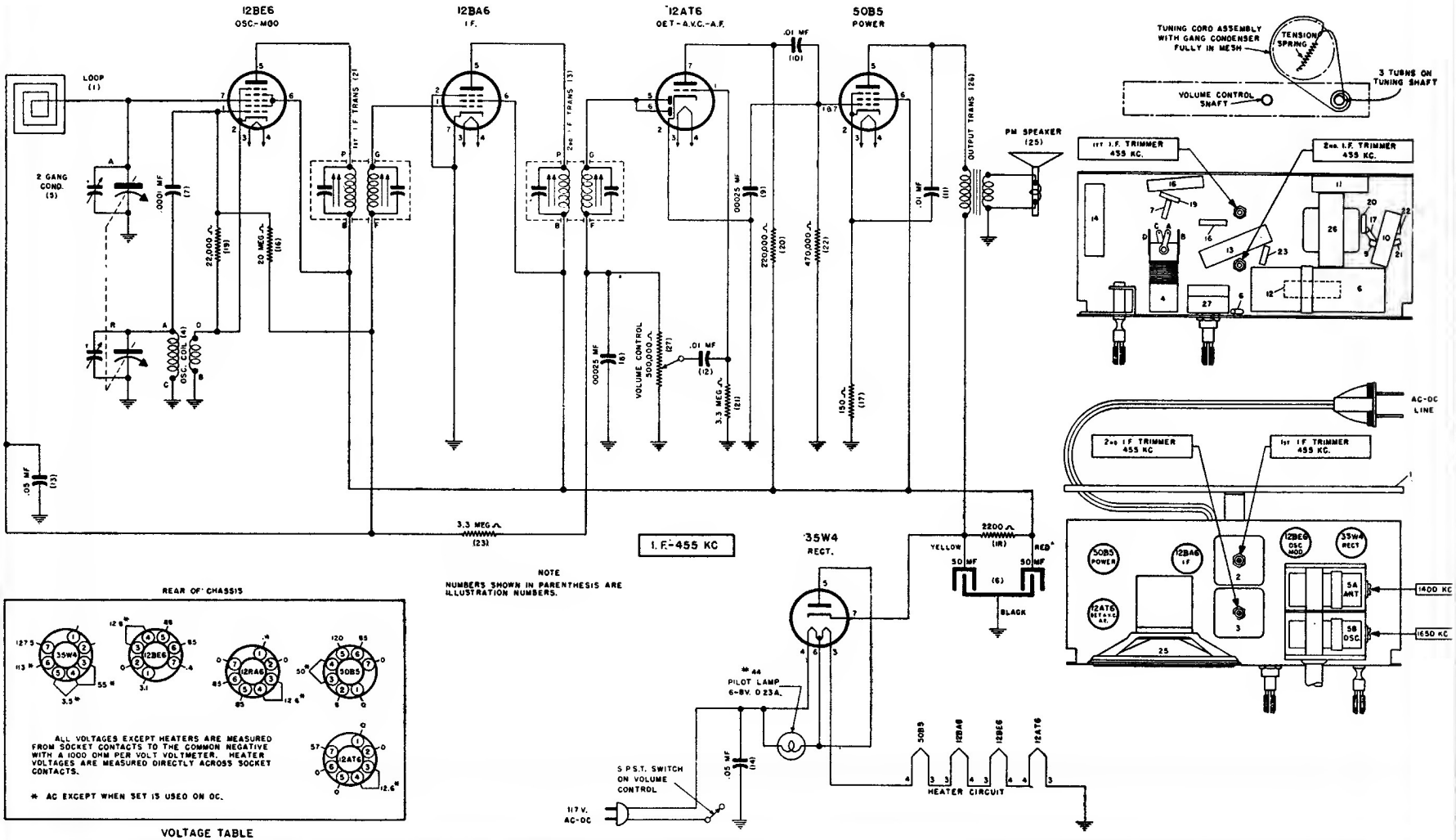

NOTE
NUMBERS SHOWN IN PARENTHESIS ARE ILLUSTRATION NUMBERS.

REAR OF CHASSIS

ALL VOLTAGES EXCEPT HEATERS ARE MEASURED FROM SOCKET CONTACTS TO THE COMMON NEGATIVE WITH A 1000 OHM PER VOLT VOLTMETER. HEATER VOLTAGES ARE MEASURED DIRECTLY ACROSS SOCKET CONTACTS.

* AC EXCEPT WHEN SET IS USED ON DC.

VOLTAGE TABLE
(BOTTOM VIEW OF CHASSIS)