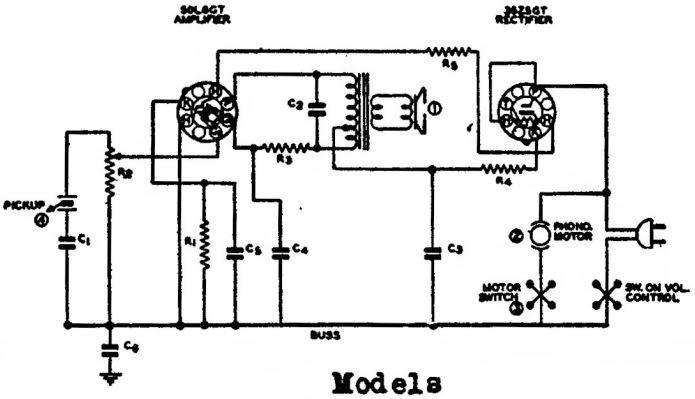


| CHAS. NO. | PART NO. | DESCRIPTION |
|---|---|---|
| R1 | N-3063 | 150 OHM 0.5W. 10% |
| R2 | N-3845 | 0.5M VOLUME CONTROL |
| R3 | N-3846 | 470 OHM 0.5W. 10% |
| R4 | N-3441 | 120 OHM 2W. 10% |
| R5 | N-3409 | 220 OHM 2W. 10% |
| C1 | N-1345 | .05 MFD. 200% |
| C2 | N-1345 | .05 MFD. 400% |
| C3 | | 40 MFD. 150% |
| C4 | N-3436 | 40 MFD. ELECT. 150% |
| C5 | | 50 MFD. 50% |
| C6 | N-1345 | .05 MFD. 200% |

| CHAS. NO. | PART NO. | DESCRIPTION |
|---|---|---|
| 1 | N-4067 | 4" PM DYNAMIC SPKR. |
| 2 | N-4076 | OUTPUT TRANSF. |
| 3 | N-3845 | PHONO 150TOR |
| | N-3850 | " " ALTER. |
| 4 | N-3814 | MOTOR SWITCH |
| 5 | N-3440 | PHONO PICKUP |
| | N-3442 | " " ALTER. |

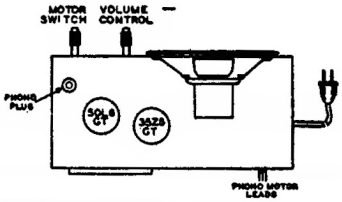


# Models

## RWF/RWFU (78 & 238)

Sonora
Clear as a Bell

# Models

## RYM/RYMU (224)

## ALIGNMENT

| Operation | Connect Oscillator To: | Dummy Ant. | Set Osc. To: | Set Dial To: | Adjust Trimmers | Purpose |
|---|---|---|---|---|---|---|
| 1 | Converter Grid | .05 MFD. | 455 KC | Min. Cap. | C, D, E | Align IF |
| 2 | Antenna | 100 MMF. | 1620 KC | Min. Cap. | B | Set Oscillator |
| 3 | Antenna | 100 MMF. | 1400 KC | 1400 KC | A | Adjust Ant. |
| 4 | Antenna | 100 MMF. | 600 KC | 600 KC | .... | Check Calibration |

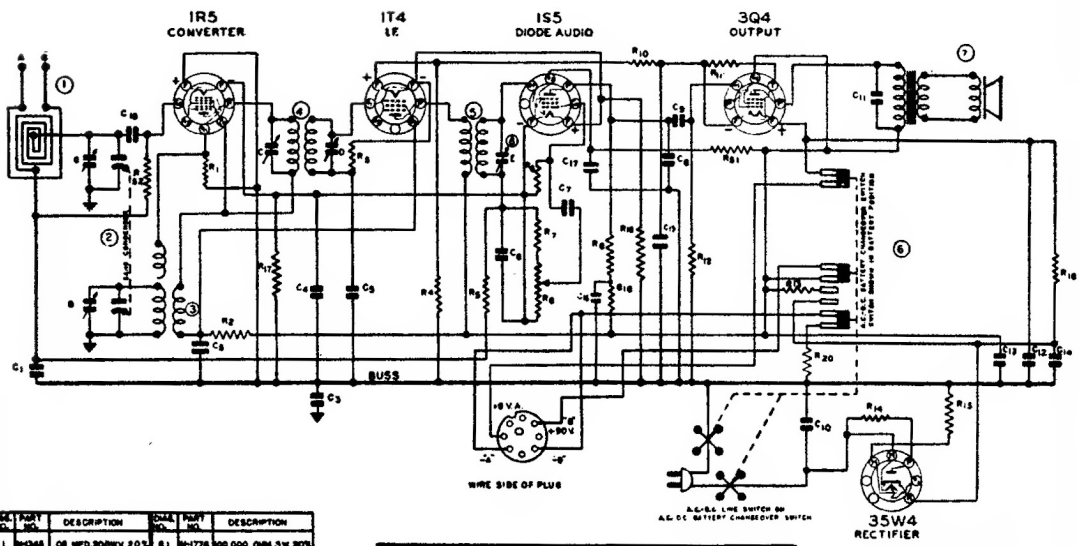


| CHAS. NO. | PART NO. | DESCRIPTION |
|---|---|---|
| C1 | N-1345 | .05 MFD.200WV. 20% |
| C2 | N-1345 | .05 MFD. 200WV. 20% |
| C3 | N-3060 | .2 MFD. 200 WV. 10% |
| C4 | N-1381 | 1 MFD. 200 WV. 20% |
| C5 | N-1376 | .02 MFD. 400 WV. 20% |
| C6 | N-1370 | .0001 MFD. MICA 20% |
| C7 | N-4094 | .005 MFD. 200 WV. 20% |
| C8 | N-1374 | .0001 MFD. MICA 20% |
| C9 | N-1344 | .01 MFD. 400WV. 20% |
| C10 | N-1345 | .05 MFD. 400WV. 20% |
| C11 | N-2063 | .003 MFD. 600WV. |
| C12 | N-2748 | 30 MFD. 7.5 V. ELECTR. 18 +40% |
| C13 | | 40 MFD. 150V. ELYTIC |
| C14 | | 60 MFD. 150V. COND. |
| C15 | N-5232 | 2000 MFD 7.5 V. ELECT. |
| C16 | N-1351 | .1 MFD 200WV 20% |
| C17 | N-1344 | .01 MFD. 400WV. 20% |
| C18 | N-2306 | .005 MFD MICA 20% |
| 1 | N-6373 | LOOP ANT. COIL |
| 2 | N-4818 | TWO GANG COND |
| 3 | N-5221 | OSCILLATOR COIL |
| 4 | N-5474 | 1ST I.F. TRANSF |
| 5 | N-5082 | 2ND. I.F. TRANSF |
| 6 | N-4149 | CHANGEOVER SWITCH |
| 7 | N-5233 | 8" PM. SPKR. & TRANS. |
| 8 | N-5449 | ADJUSTABLE TRIMMER |

| CHAS. NO. | PART NO. | DESCRIPTION |
|---|---|---|
| R1 | N-1776 | 100,000 OHM .5W. 20% |
| R2 | N-4888 | 18,000 OHM .5W. 10% |
| R3 | N-1263 | 10 MEGOHM .5W. 20% |
| R4 | N-4280 | 540 OHM .5W. 10% |
| R5 | N-4277 | 2.2 MEGOHM .5W. 20% |
| R6 | N-1143 | 10 MEGOHM .5W. 20% |
| R7 | N-4083 | 47,000 OHM .5W. 20% |
| R8 | N-3940A | MEG. VOLUME CONT. |
| R9 | N-2978 | 1 MEGOHM .5W. 10% |
| R10 | N-5469 | 15 OHM .5W. 10% |
| R11 | N-4420 | 330 OHM .5W. 10% |
| R12 | N-4277 | 2.2 MEGOHM .5W. 20% |
| R13 | N-1776 | 1,500 OHM .5W. 20% |
| R14 | N-3449 | 42 OHM 1W. 10% |
| R15 | N-3342 | 560 OHM 12.5W. 10% |
| R16 | N-5054 | 2,150 OHM 5.5W. 5% |
| R17 | N-1776 | 1,500 OHM .5 20% |
| R18 | N-5082 | 2,200 OHM .5 20% |
| R19 | N-2973 | 100,000 OHM .5 10% |
| R20 | N-5063 | 12 OHM .5 10% |
| R21 | N-5473 | 39 MEGOHM .5 10% |
| R22 | N-4277 | 2.2 MEGOHM .5 20% |

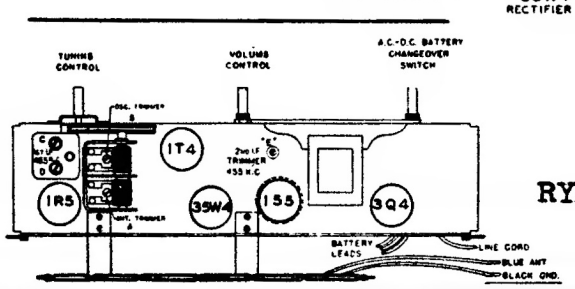


I.F. 455K.C.

# Models

## RYM/RYMU (224)