SPARTON SUPERHETERODYNE MODEL 10-21
INTERMEDIATE FREQUENCY 456 K.C.

BOTTOM VIEWS OF ALL SOCKET CONNECTIONS

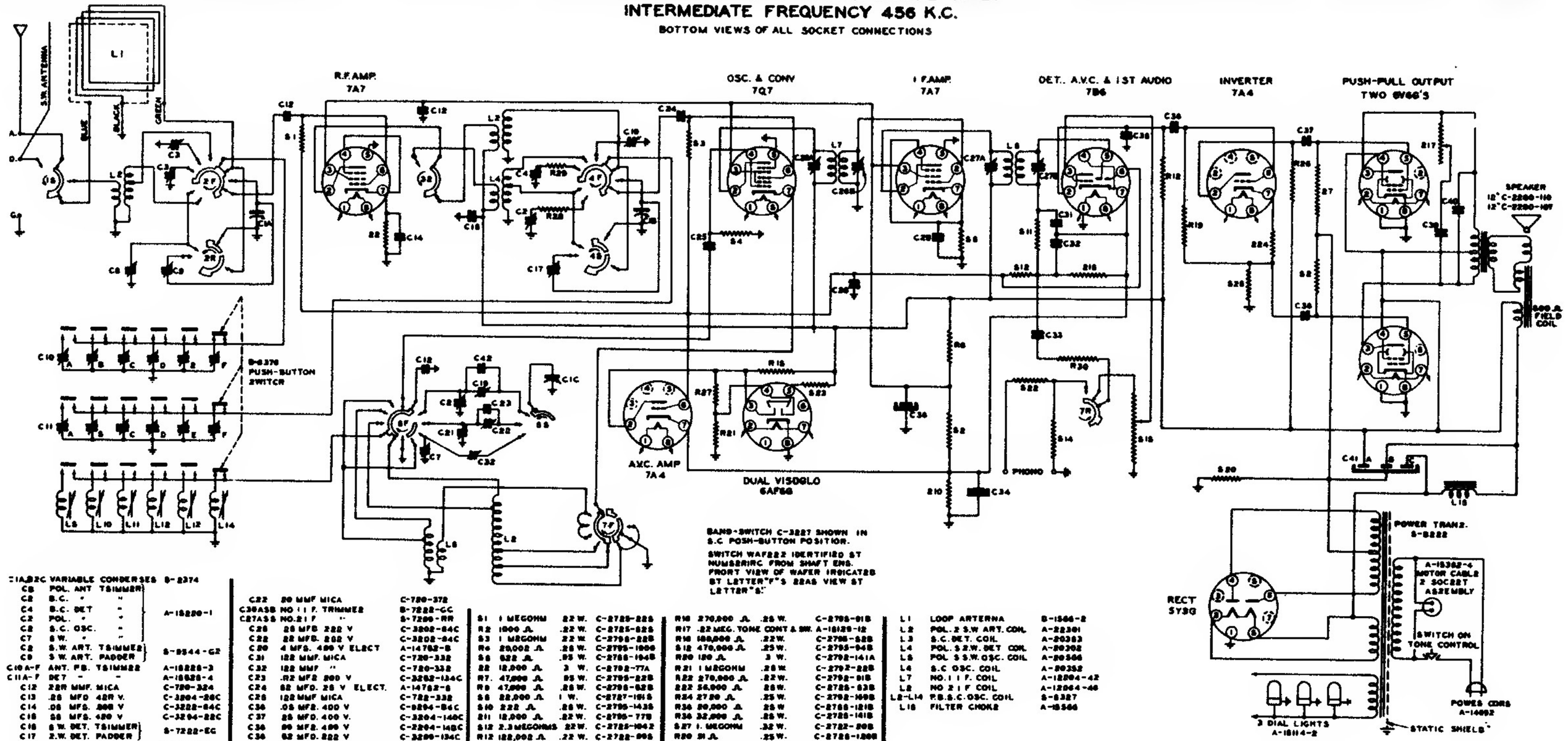

C1A,B,C	VARIABLE CONDENSES	B-2374
C6	POL. ANT TSIMMER	
C2	B.C. " "	
C4	B.C. DET " "	A-15220-1
C5	POL. " "	
C8	S.C. OSC. "	
C7	S.W. " "	
C8	S.W. ART. TSIMMER	B-9544-G2
C9	S.W. ART. PADDER	
C10A-F	ANT. F.B. TSIMMER	A-15228-3
C11A-F	DET " "	A-15528-4
C12	220 MMF. MICA	C-720-324
C13	.25 MFD 420 V.	C-3204-28C
C14	.05 MFS. 200 V	C-3222-84C
C15	.05 MFS. 400 V	C-3204-22C
C16	S.W. DET. TSIMMER	B-7222-EG
C17	S.W. DET. PADDER	
C18	282 MMF MICA	B-8295-4
C19	S.C. OSC PADDER	B-7200-77
C20	POL. OSC. PADDER	
C21	" " TRIMMER	B-7200-DG
C22	S.W. OSC. PADDER	
C23	2302 MMF. MICA	C-722-302
C24	220 MMF. MICA	C-722-324

C22	20 MMF MICA	C-720-372
C30A,S,B	NO 1 I F. TRIMMER	B-7222-GC
C27A,S,B	NO. 2 I F "	B-7200-RR
C28	25 MFD 222 V	C-3202-84C
C29	22 MFD. 202 V	C-3202-84C
C30	4 MFS. 400 V ELECT	A-14762-B
C31	122 MMF. MICA	C-720-332
C32	122 MMF "	C-720-332
C33	.02 MFD 200 V	C-3202-134C
C34	82 MFD. 25 V ELECT.	A-14762-6
C35	122 MMF MICA	C-722-332
C36	.05 MFD. 400 V	C-3204-84C
C37	25 MFD. 400 V.	C-3204-140C
C38	80 MFD. 400 V	C-2204-148C
C39	82 MFD. 222 V	C-3200-134C
C40	.002 MFS. 200 V	C-3200-112C
C41 A	18 MFD. 400 V.	
C41 B	10 MFD. 420 V. ELECT.	A-14664-7
C41 C	12 MFS. 422 V.	
C42	282 MMF MICA	C-720-324

S1	1 MEGOHM	.22 W.	C-2725-225
R2	1000 Ω	.22 W.	C-2725-225
S3	1 MEGOHM	.22 W.	C-2725-225
R4	20,000 Ω	.25 W.	C-2725-1000
S5	522 Ω	.05 W.	C-2725-1045
S6	12,000 Ω	3 W.	C-2792-77A
R7	47,000 Ω	.05 W.	C-2725-223
R8	47,000 Ω	.25 W.	C-2725-223
S9	22,000 Ω	1 W.	C-2727-1015
S10	222 Ω	.25 W.	C-2725-1435
S11	12,000 Ω	.22 W.	C-2725-772
S12	2.3 MEGOHMS	.22 W.	C-2725-1042
R13	122,000 Ω	.22 W.	C-2722-905
R14	270,000 Ω	.25 W.	C-2725-918
S15	2 MEG. VOL. CONT.		A-12142-2

R16	270,000 Ω	.25 W.	C-2725-918
R17	.22 MEG. TONE CONT & SW.		A-18129-12
R18	180,000 Ω	.22 W.	C-2725-522
S19	470,000 Ω	.25 W.	C-2725-945
R20	120 Ω	3 W.	C-2792-141A
R21	1 MEGOHM	.25 W.	C-2792-225
R22	270,000 Ω	.22 W.	C-2792-918
S23	56,000 Ω	.25 W.	C-2725-632
R24	2720 Ω	.25 W.	C-2792-1095
R25	20,000 Ω	.25 W.	C-2725-1218
R26	32,000 Ω	.25 W.	C-2725-1418
S27	1 MEGOHM	.32 W.	C-2722-205
R28	31 Ω	.25 W.	C-2725-1205
S29	150 Ω	.22 W.	C-2725-1305
R30	330,000 Ω	.22 W.	C-2725-229

L1	LOOP ANTENNA	B-1586-2
L2	POL. 2 S.W ART. COIL	A-22301
L3	S.C. DET. COIL	A-20383
L4	POL. S 2.W. DET COIL	A-20202
L5	POL S S.W. OSC. COIL	A-20586
L6	S.C OSC. COIL	A-20252
L7	NO. 1 I F. COIL	A-12204-42
L8	NO 2 I F COIL	A-12064-46
L9-L14	P.B.S.C. OSC. COIL	B-8327
L15	FILTER CHOKE	A-15566

TUBE	FUNCTION	Voltage of Socket Prongs to Gnd. See Prong Nos. on Schematic Dia.								
		No. 1	No. 2	No. 3	No. 4	No. 5	No. 6	No. 7	No. 8	No. 9
7A7	R-F Amplifier	0	260	75	3.8	0	0	3.8	6.2*	-
7Q7	Osc - Converter	0	260	75	-2.3	0	0	0	6.2*	-
7A7	I.F. Amplifier	0	260	75	3	0	0	3	6.2*	-
7B6	2nd Det - AVC - 1st Audio	0	140	0	1.1	0	.5	.6	6.2*	-
7A4	Inverter	0	223	50	0	0	17	60	6.2*	-
7A4	Viso-Glo Amplifier	0	40	160	0	275	0	1.2	6.2*	-
6V6G	Power Amplifier	0	0	260	265	-17	-17.5	6.3*	0	-
6V6G	Power Amplifier	0	0	260	265	-17	265	6.3*	0	-
5Y3G	Rectifier	0	390	0	355*	0	355*	0	390	-
6AF6G	Viso-Glo	0	0	40	17	260	0	6.2*	0	-

Notes: Voltage readings are for schematic diagram on back of sheet. Allow 15% + or - on all measurements. Always use meter scale which will give greatest deflection within scale limits. All DC measurements made with 20,000 ohms per volt voltmeter. All AC voltages made with rectifier type voltmeter. Unless designated otherwise, voltages in table are + DC voltages.
*AC volts.