STEWART-WARNER 01-6K and 01-6M CHASSIS

LOOP CONNECTIONS SHOWN ON BACK OF THIS PAGE.

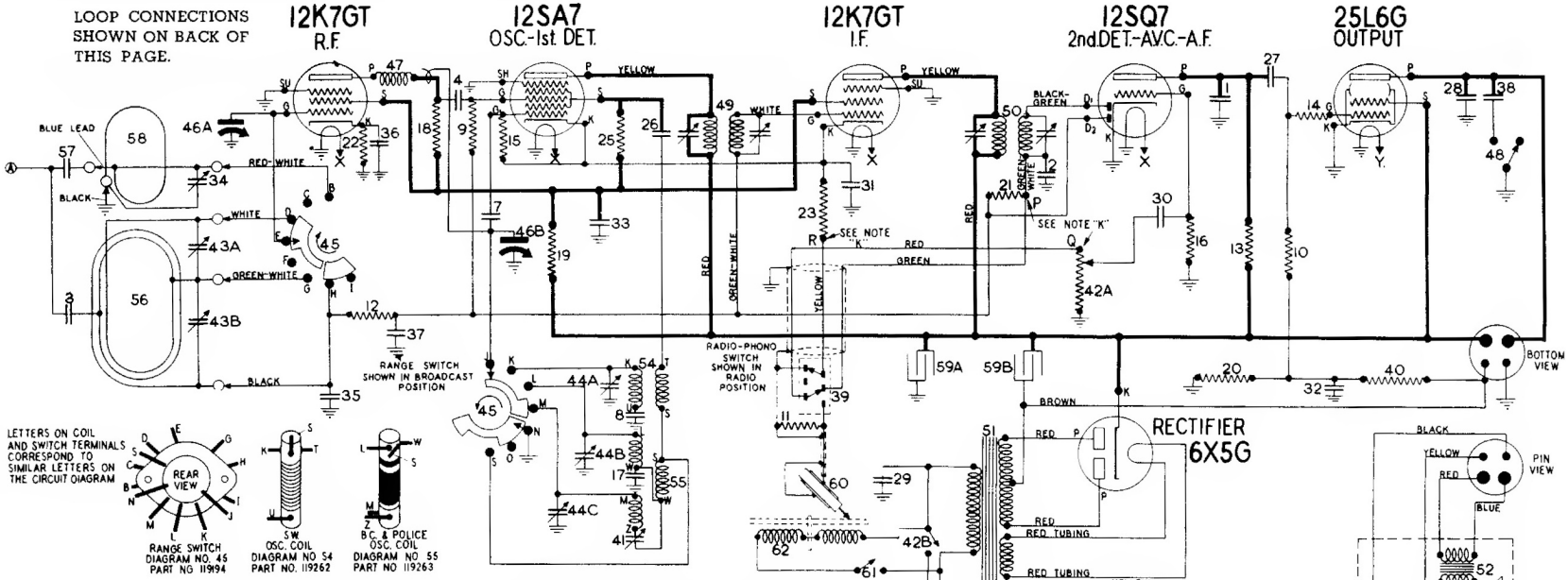

NOTE "K": The 01-6M circuit is shown above. The 01-6K chassis does not have the phonograph attachment. In the 01-6K circuit, point "P" connects to point "Q" and point "R" is grounded to the chassis
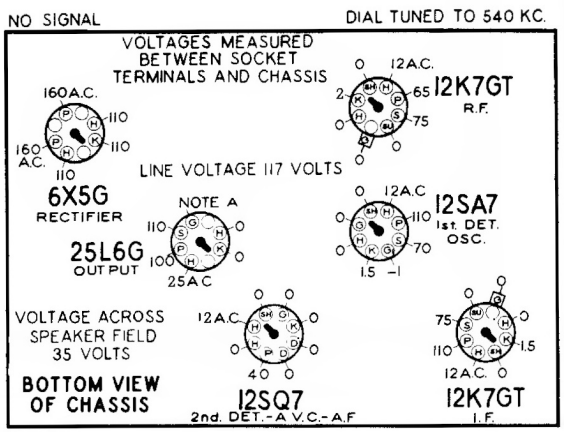
1	Condenser—mica 260 mmfd.
2	Condenser—mica 260 mmfd. (Model 01-6K only)
	Condenser—mica 50 mmfd. (Model 01-6M only)
3-4	Condenser—mica 110 mmfd.
5-6	Lamp—6-8 volt Mazda No. 51.
7	Condenser—mica 50 mmfd.
8	Condenser—mica .0042 mfd.
9	Resistor—carbon 47,000 ohms ¼ watt.
10	Resistor—carbon 220,000 ohms ¼ watt.
11	Resistor—carbon 220,000 ohms ¼ watt (Model 01-6M only)
12-13	Resistor—carbon 470,000 ohms ¼ watt.
14	Resistor—carbon 100 ohms ¼ watt.
15	Resistor—carbon 100,000 ohms ¼ watt.
16	Resistor—carbon 3.3 meg. ¼ watt.
17	Condenser—mica 1650 mmfd. (3%)
18-19	Resistor—carbon 3,300 ohms ¼ watt.
20	Resistor—carbon 220,000 ohms ¼ watt.
21	Resistor—carbon 1.5 meg. ¼ watt.
22	Resistor—insulated 470 ohms ¼ watt.
23	Resistor—150 ohms ¼ watt.
24	Speaker—dynamic 6"
25	Resistor—680 ohms ¼ watt.
26-27-28	Condenser—.01 mfd. 600 volt
29	Condenser .01 mfd. 600 volt (shielded)
30	Condenser—.004 mfd. 600 volt
31-32-33	Condenser -.2 mfd. 600 volt
34	Condenser—trimmer
35-36-37	Condenser—.05 mfd. 600 volt
38	Condenser—.04 mfd. 600 volt
39	Switch "Radio-Phono" with escutcheon (Model 01-6M only)
40	Resistor—carbon 680,000 ohms ¼ watt.
41	Condenser—padding
42A-42B	Volume control—1 meg. (with switch)
43A-43B	Trimmer condenser—2 section
44A to 44C	Condenser—trimmer 3 section
45	Switch—range
46A-46B	Condenser—gang (with drum)
47	Coil—compensating
48	Switch—tone control
49	Transformer—1st I.F.
50	Transformer—2nd I.F.
51	Transformer—power
52	Transformer—output—for U-115088 speaker
53	Cone & Voice coil assembly for U-115088 speaker
54	Coil—short wave oscillator
55	Coil—B.C. & Pol. Oscillator
56	Loop antenna (BC & POL) with cabinet back (01-6K only)
	Loop antenna (BC & POL) with cabinet back (01-6M only)
57	Condenser mica 5 mmfd.
58	Short wave loop antenna assembly complete (01-6K only)
	Short wave loop antenna assembly complete (01-6M only)
59A-59B	Condenser—electrolytic 20-40 mfd. 200