STROMBERG-CARLSON NO. 515 RADIO RECEIVERS

STROMBERG-CARLSON TELEPHONE MANUFACTURING COMPANY
ROCHESTER, NEW YORK

Input Power Rating ..... 140 Watts
Intermediate Frequency ..... { 455 Kilocycles (Amplitude Modulation)
4.3 Megacycles (Frequency Modulation)

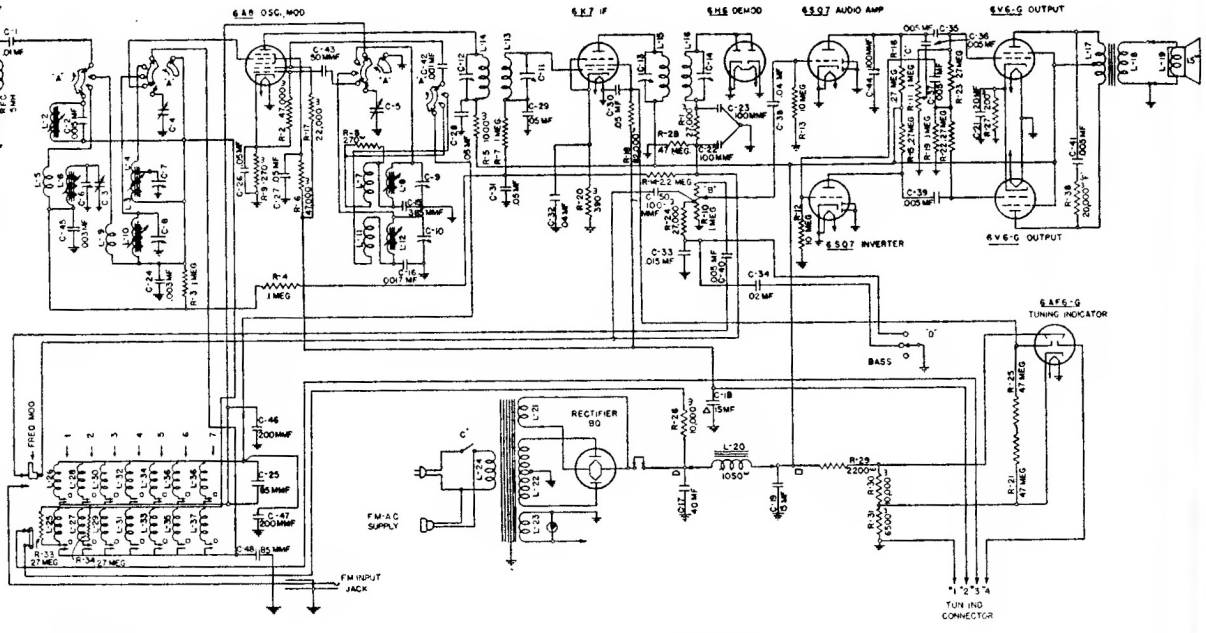

'A' - RANGES
'B' - VOLUME
'C' - OFF-ON-TONE
'D' - BASS
I.F. - 455 K.C.

Wiring and Schematic Diagram
Amplitude Modulation

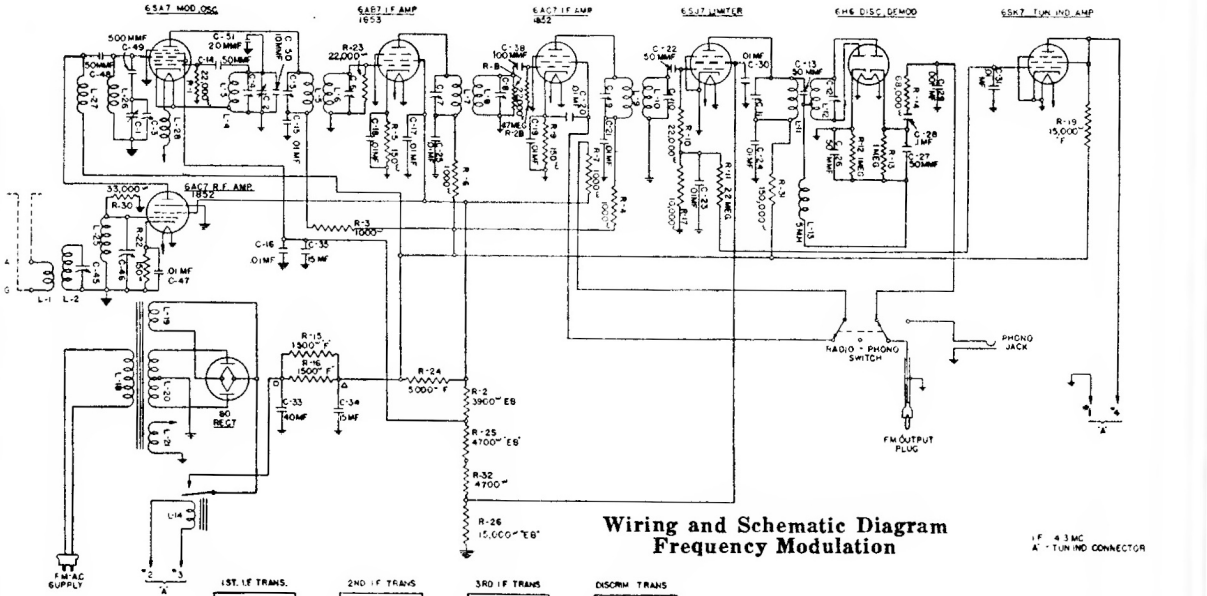

Wiring and Schematic Diagram
Frequency Modulation

I.F. - 4.3 MC
'A' - TUN IND CONNECTOR