TEMPLETONE RADIO MFG. CORP.

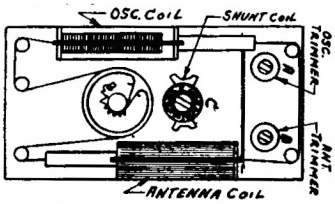

Models E-510 to E-519, also G-513 and G-515 are almost identical and correspond with few exceptions to the diagram below. In some sets, 14 volt tubes were used as indicated.

Controls: Only two controls are required for operation. The left-hand control puts set into operation, increases the volume with clockwise rotation, and includes the power switch. The right-hand control tunes the dial to the desired station.

Antenna: For normal reception, no outside aerial is required, as more than adequate pickup is obtained by the self-contained loop antenna.

At installations remote from the stations desired to be heard, improved results may be obtained by rotating the receiver for maximum response, as the loop antenna has a marked directional effect on weak signals. Reception can also be improved, and the directional effect reduced, by attaching a length of insulated wire approximately 15 to 25 feet long, to the antenna connection provided at the back of the cabinet.

Alignment: No attempt should be made to realign this receiver until it has been determined that a poor tube, or some local condition is not responsible for faulty reception. An output meter may be clipped directly across the voice coil lugs.

The Signal Generator may be connected through a 0.01 mf capacitor (used as dummy antenna) to the lug on RF section (B) of tuning capacitor. Connect ground clip of generator directly to chassis. Align the I. F. trimmers to 455 kc, using least possible input from Signal Generator to avoid developing A.V.C. voltage which would make the tuning adjustments very broad.

To align RF trimmers, remove the 0.01 mf capacitor and connect the Signal Generator leads or two or three turns of heavy wire, forming a self-supporting loop of about 7 or 8 inches diameter, placed about a foot away from the receiver's loop antenna. Again, use the least possible input from the Signal Generator. With the tuning capacitor plates completely out of mesh, and pointer at extreme left end of travel, adjust the oscillator trimmer (A) (on front section of tuning capacitor) to 1700 kc. Readjust both Signal Generator and tuning capacitor to 1550 kc and adjust the RF trimmer (B) (on rear section) for maximum response. With tuning capacitor plates fully meshed, the receiver should tune to 535 kc; however, no adjustment is required at this point. For checking purposes, four fine marks are engraved on the dial plate. These represent, in order, the pointer settings for 1550, 1000, 600 kc, and the pointer position with capacitor plates fully meshed.

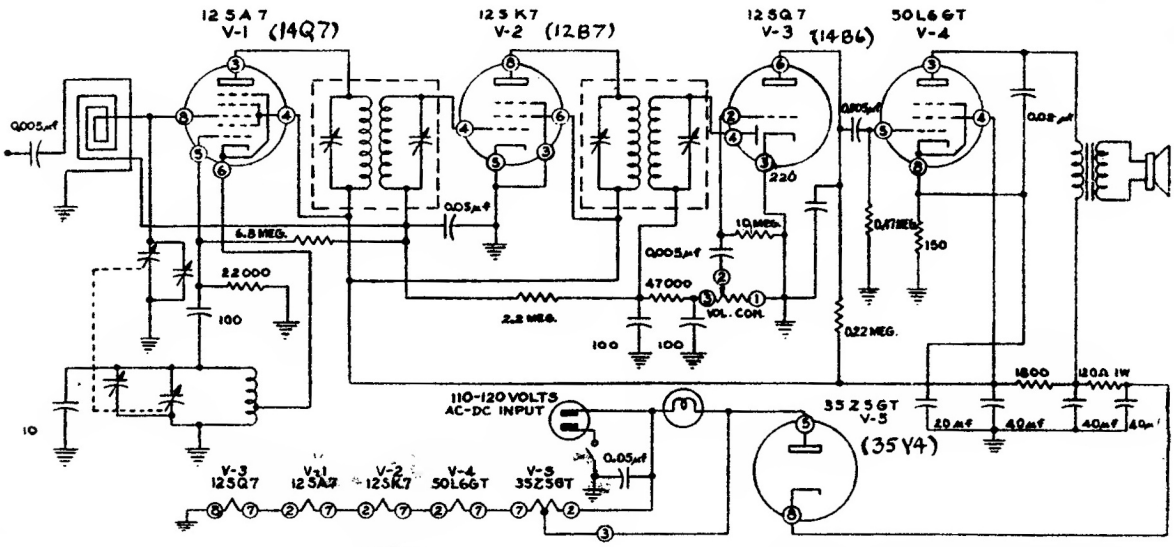

NOTES:
1. RESISTORS ARE IN OHMS, CAPACITORS ARE IN µµf, INDUCTORS ARE IN µH UNLESS OTHERWISE MARKED.
2. VOLUME CONTROL R-4 IS 0.5 MEGOHMS, WITH SWITCH S-1 MOUNTED ON REAR.
3. IN A FEW EARLY MODELS C-12D WAS A SEPARATE 25µf CAPACITOR, C-12A WAS 80µf, C-12C WAS 20µf AND R-11 WAS NOT USED.