Trav-ler Radio Corp. Electric Phonograph Model 7004

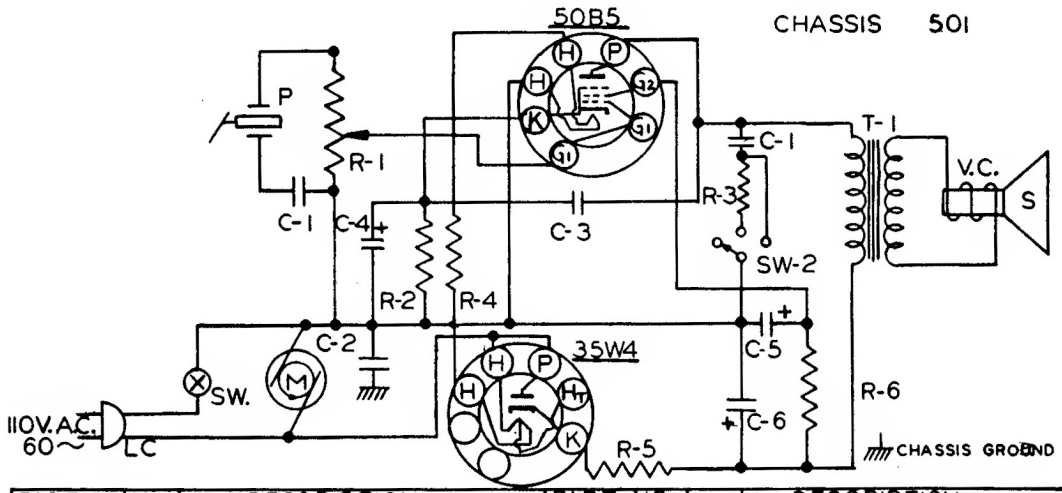

PART NO.		DESCRIPTION	PART NO.		DESCRIPTION
VC-6	R-1	1/2 MEG. VOLUME CONTROL.	M-1	M	MOTOR 110 V. 60~ 9" TURNTABLE
IR-14	R-2	150 Ω RESISTOR. 1/2W. 20%	CO-2	LC	POWER CORD.
IR-7	R-3	2200 Ω RESISTOR. 1/2W. 5%		SW	A.C. SW. ON VOLUME CONTR
WR-1	R-4	210 Ω RESISTOR. 5W. 5% WIRE WOUND.	SW-2	SW2	TONE SWITCH
IR-17	R-5	39 Ω RESISTOR 1/2W. 20%		T-1	OUTPUT TRANSFORMER
IR-18	R-6	4700 Ω RESISTOR. 1/2W. 20%	SPK-2	VC	VOICE COIL
PC-5	C-1	.05 MFD. CONDENSER. 400V.		S	P.M. SPEAKER
PC-8	C-2	.1 MFD. CONDENSER. 400 V.	TU-22	—	50B5 — 35W4
PC-7	C-3	.01 MFD. CONDENSER. 400 V.	PU-2	P	CRYSTAL CARTRIDGE L-72
EC-5	C-4	10 MFD. 25 V.			
	C-5	12 MFD. 150 V. ELECTROLYTIC			
	C-6	8 DMFD. 15 DV			

Trav-ler Radio Corp. Phonograph Models 7014 and 7015 are similar to Model 7000.

TRAV-LER RADIO CORP.

Model 5028

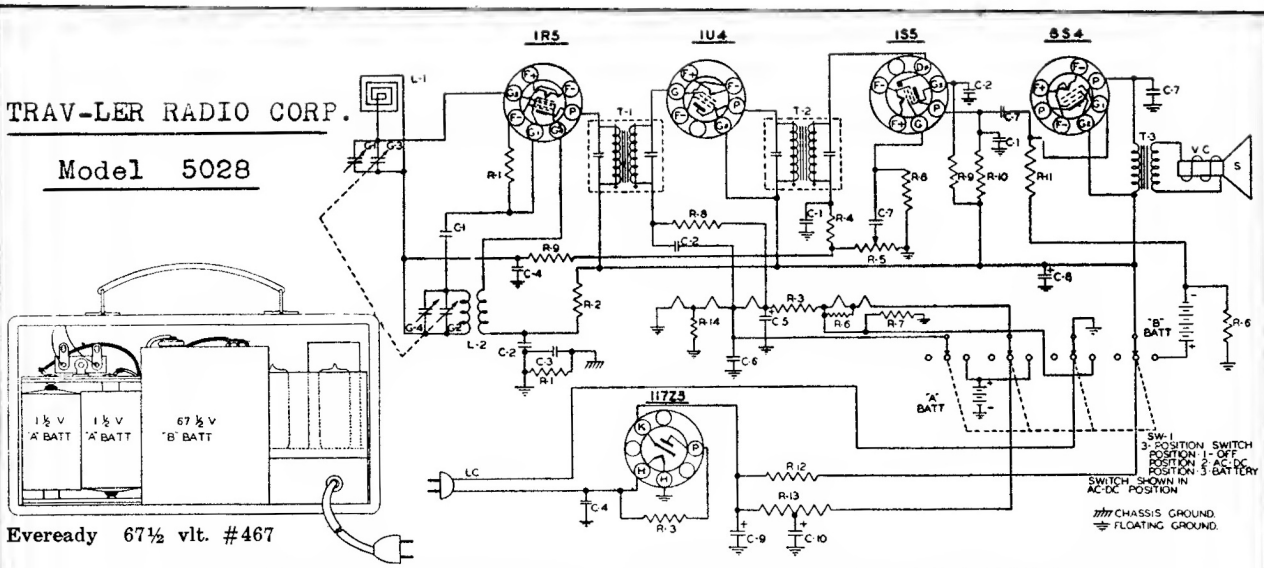

Eveready 67½ vlt. #467

Burgess 67½ vlt. #XX45

General 67½ vlt. #W45A

Ray-O-Vac 67½ vlt. #4367

PART NO		DESCRIPTION	PART NO		DESCRIPTION	PART NO		DESCRIPTION
IR-20	R-1	220 M Ω RESISTOR 1/2W 20 %	PC-3	C-6	.1 MFD. CONDENSER 200 W V	LI-5	T-1	INPUT IF TRANSFORMER
IR-37	R-2	150 M Ω RESISTOR 1/2W 20 %	PC-6	C-7	.005 MFD. CONDENSER 600 W V	LI-5	T-2	OUTPUT IF TRANSFORMER
IR-17	R-3	3.3 Ω RESISTOR 1/2W 20 %	EC-14	C-8	40 MFD	SPK-8	T-3	SPEAKER OUTPUT TRANSFORMER
IR31	R-4	82M Ω RESISTOR 1/2W 10 %		C-9	40 MFD 150 WV ELECTROLYTIC		VC	VOICE COIL
VC-11	R-5	1 MEG. VOLUME CONTROL		C-10	20 MFD		S	3½ PM SPEAKER
IR-33	R-6	270 Ω RESISTOR 1/2W 10 %				TU-31	—	117Z3-1R5-1U4-1S5-3S4
IR39	R-7	620 Ω RESISTOR 1/2W 5 %		G-1	ANT TRIMMER			
IR-3	R-8	10 MEG Ω RESISTOR 1/2W 20 %	CO-3	G-2	GANG CONDENSER		"A" BATT	2 "D" SIZE 1½ VOLT FLASHLITE CELLS
IR-23	R-9	3.3 MEG Ω RESISTOR 1/2W 20 %		G-3			"B" BATT	1-67½ VOLT BATTERY
IR-12	R-10	1 MEG Ω RESISTOR 1/2W 20 %		G-4	OSC TRIMMER			
IR-13	R-11	2.2 MEG Ω RESISTOR 1/2W 20 %	LL-14	L-1	LOOP ANTENNA			
IR-12	R-12	3900 Ω RESISTOR 1 W 10 %	LO-8	L-2	OSC COIL			
WR-7	R-13	1050-1050 CANDOHM RESISTOR 5W 5%						
IR-1	R-14	470 Ω RESISTOR 1/2 20 %	CO-1	LC	LINE CORD			
MC-2	C-1	100 MMFD. MICA CONDENSER						
PC-7	C-2	.01 MFD CONDENSER 400 W V						
PC-8	C-3	.01 MFD CONDENSER 400 W V						
PC-5	C-4	.05 MFD CONDENSER 400 W V	SW-8	SW-1	4 POLE-3 POSITION SWITCH			
EC-6	C-5	10 MFD 10 WV ELECTROLYTIC						

I.F. 455 KC.