UNITED MOTORS

MOUNTING—Model 7260405 - All 1951
Cadillac Sedans. Model 7260905 - All 1951
1951 Cadillac Convertibles.

Cadillac 7260405 7260905

Packard Model 416394 uses a similar circuit.

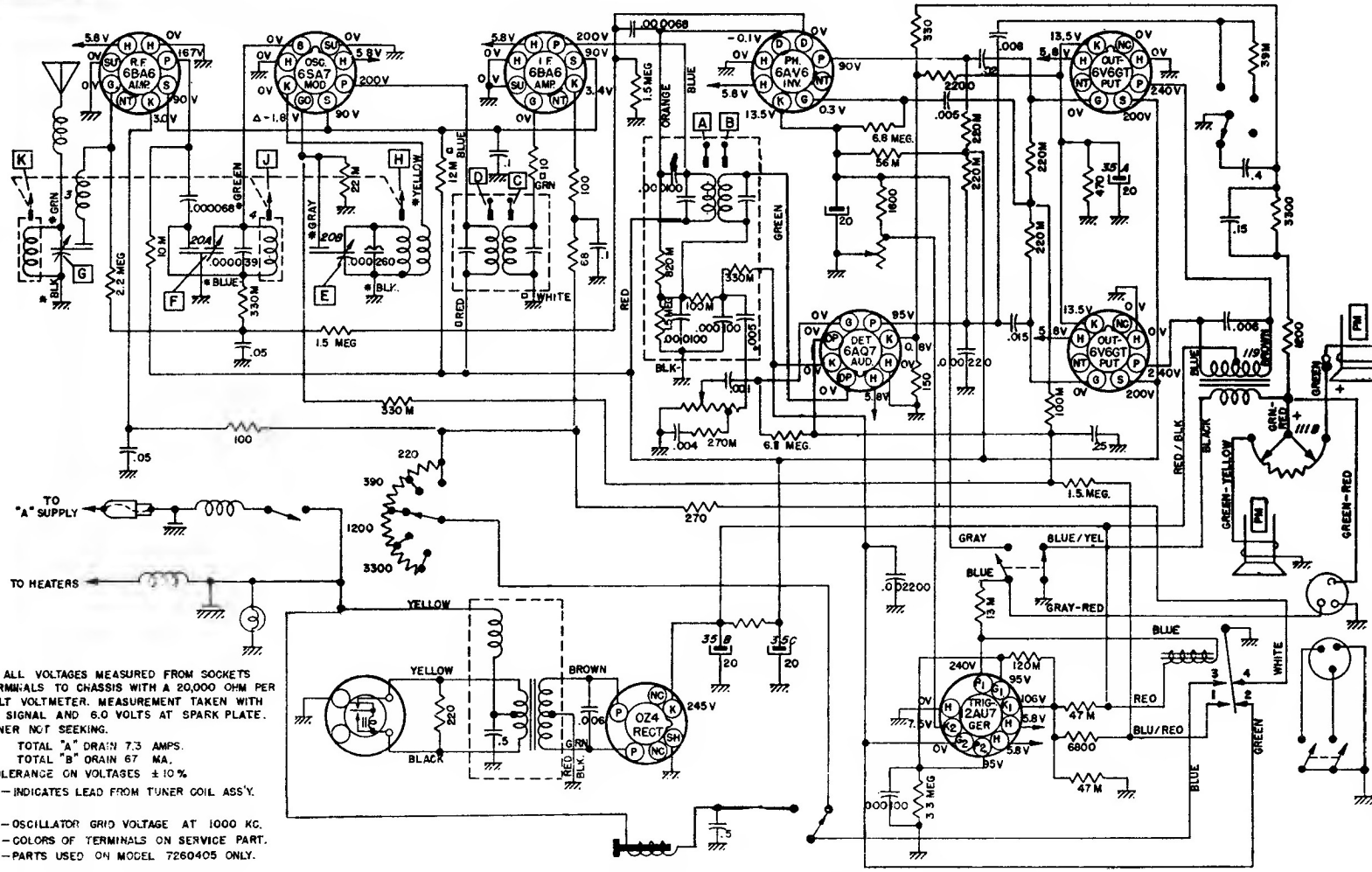

Step	Dummy Antenna	Connect To	Signal Generator Frequency	Tune Receiver To	Adjust in Sequence for Max. Output
1	0.1 mfd	6SA7 Grid (Pin 8)	260 KC	*High Frequency Stop	A, B, C, D
2	0.000068 mfd	Antenna Connector	1615 KC	High Frequency Stop	E, F, G
3	0.000068 mfd	Antenna Connector	600 KC	Signal Gen. Signal	J, K
4	0.000068 mfd	Antenna Connector	1615 KC	Signal Gen. Signal	F, G
5	0.000068 mfd	Antenna Connector	1000 KC	Signal Gen. Signal	L

*To tune to high frequency, put a 0.070" feeler gauge (or bare #13 wire) in slot against the high frequency stop.

Output Meter VTVM From [2] To Chassis
Generator Return ..... Receiver Chassis
Dummy Antenna In Series With Generator
Volume Control ..... Maximum Volume
Sensitivity Control ..... Maximum Sensitivity
Tone Control ..... Treble
Generator Output ..... Not To Exceed 2 Volts