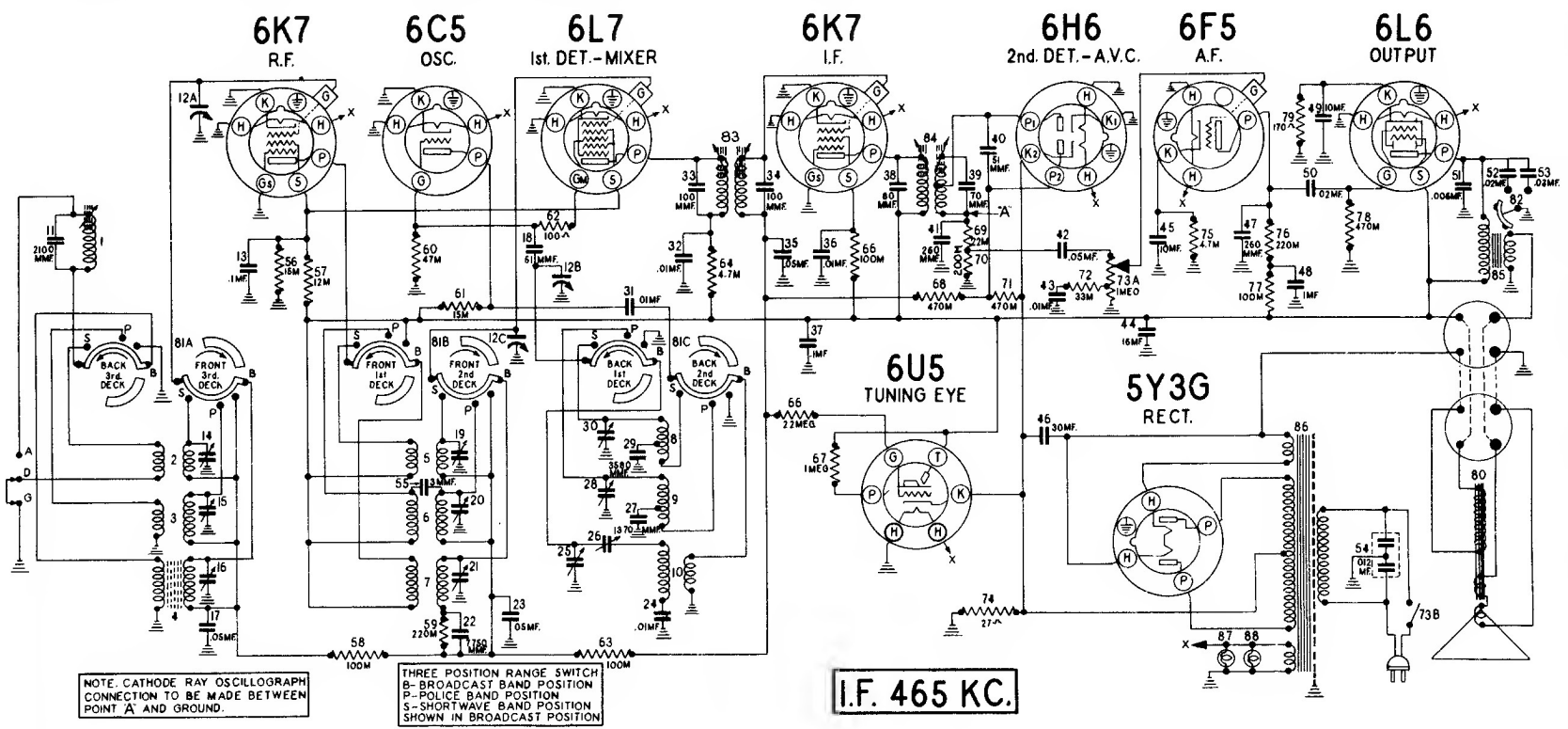

DELCO MODEL R-1131 CIRCUIT DIAGRAM