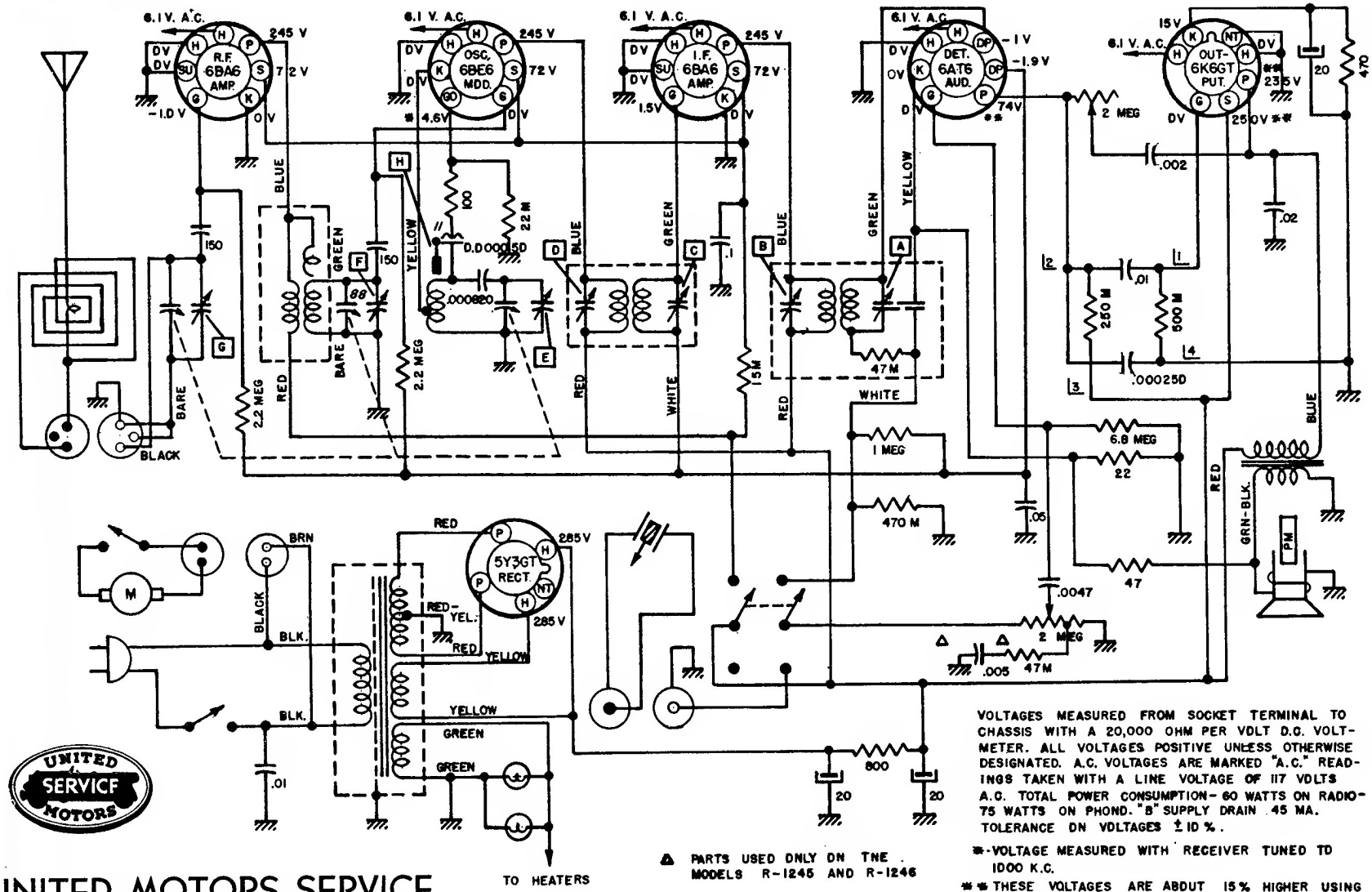

VOLTAGES MEASURED FROM SOCKET TERMINAL TO CHASSIS WITH A 20,000 OHM PER VOLT D.C. VOLTMETER. ALL VOLTAGES POSITIVE UNLESS OTHERWISE DESIGNATED. A.C. VOLTAGES ARE MARKED "A.C." READINGS TAKEN WITH A LINE VOLTAGE OF 117 VOLTS A.C. TOTAL POWER CONSUMPTION - 60 WATTS ON RADIO - 75 WATTS ON PHOND. "B" SUPPLY DRAIN 45 MA. TOLERANCE ON VOLTAGES ± 10 %.

* - VOLTAGE MEASURED WITH RECEIVER TUNED TO 1000 K.C.

** THESE VOLTAGES ARE ABOUT 15% HIGHER USING "PHONO."

△ PARTS USED ONLY ON THE MODELS R-1245 AND R-1246

UNITED SERVICE MOTORS

UNITED MOTORS SERVICE

DIVISION OF GENERAL MOTORS CORPORATION

DELCO RADIO MODELS R-1244, R-1245 and R-1246

I.F. 262 KC.