UNITED MOTORS SERVICE

OLDSMOBILE DELUXE MODEL 982455

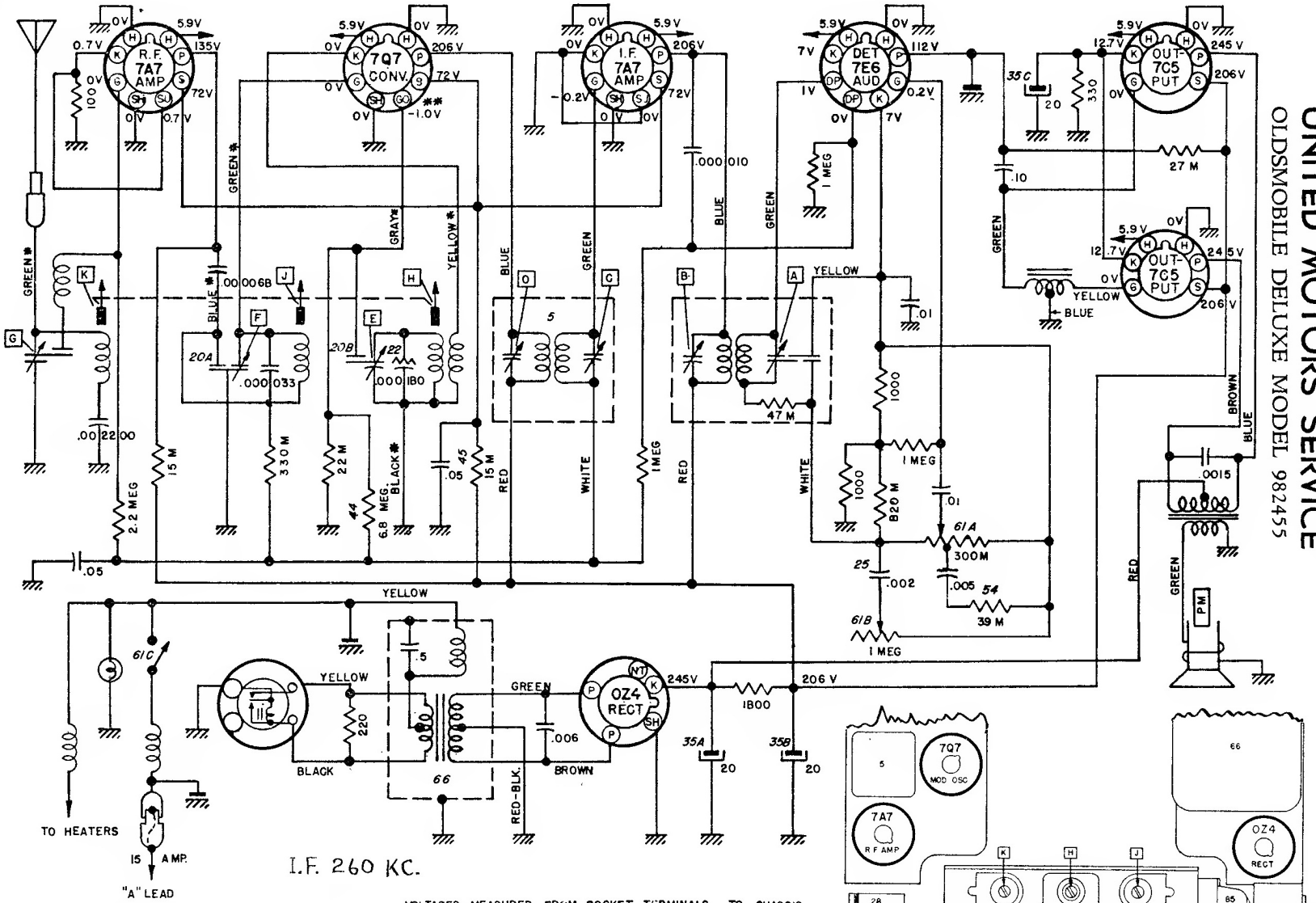

* INDICATES LEAD COMING FROM TUNER COIL ASSEMBLY.
TUBE SOCKETS VIEWED FROM TERMINAL SIDE.
NT — DESIGNATES A PIN ON THE TUBE TO WHICH THERE IS NO ELEMENT CONNECTION.
** VOLTAGE MEASURED WITH RECEIVER TUNED TO 1000 KC.

VOLTAGES MEASURED FROM SOCKET TERMINALS TO CHASSIS WITH A D.C. VOLTMETER HAVING A RESISTANCE OF 20,000 OHMS PER VOLT. ALL VOLTAGES POSITIVE UNLESS OTHERWISE DESIGNATED. READINGS TAKEN WITH 6.0 VOLTS AT SPARK PLATE. TOTAL CURRENT DRAIN 7 AMPERES. "B" SUPPLY DRAIN 67 MA. TOLERANCE ON VOLTAGES ± 10%.