UNITED MOTORS

Pontiac 1946 Model 984172

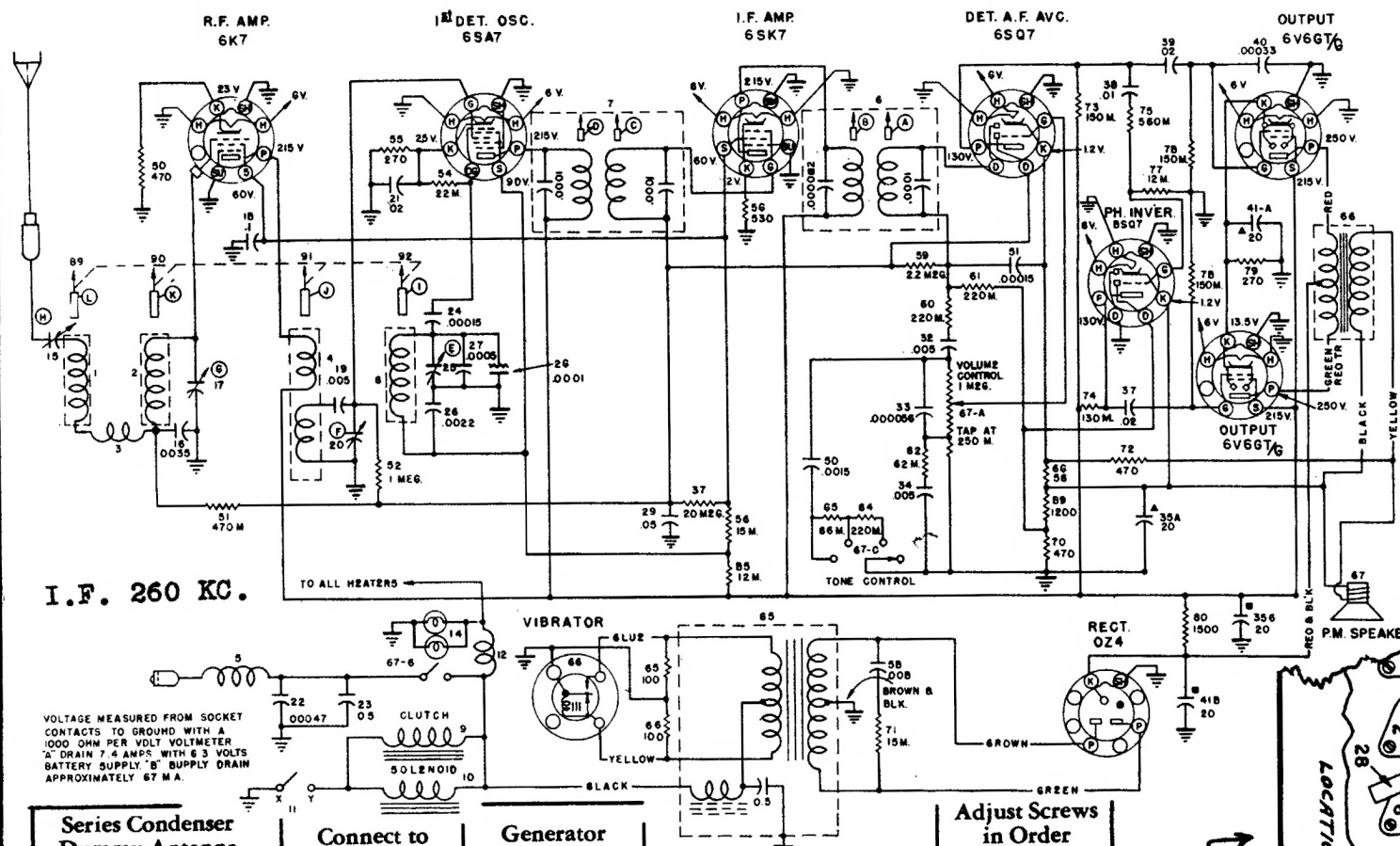
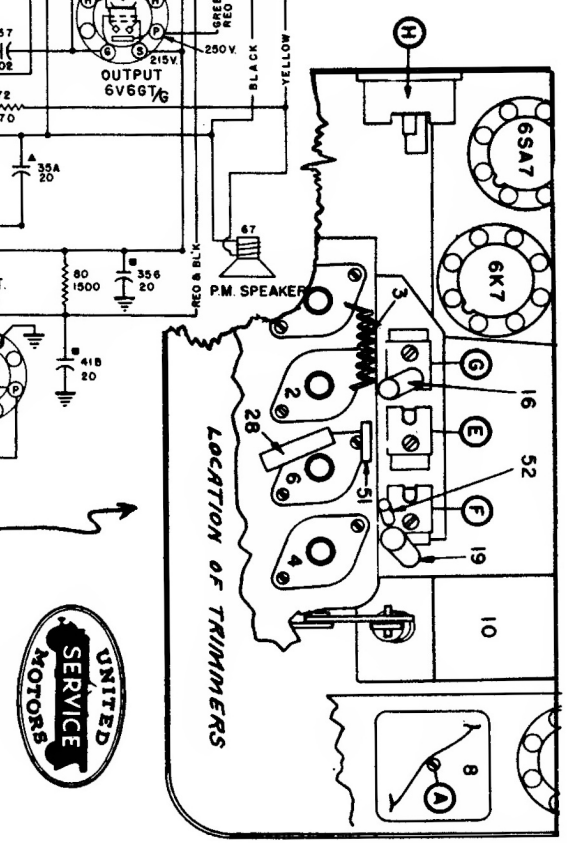
Series Condenser Dummy Antenna	Connect to	Generator Frequency	Tune Receiver To	Adjust Screws in Order
.1 Mfd.	6SK7 Grid	260 K.C.	No Broadcast Signal	A, B
.1 Mfd.	6SA7 Grid	260 K.C.	No Broadcast Signal	C, D
*.000072	Antenna	1,645 K.C.	Extreme High Freq. End	E, F, G, H
.000072	Antenna	1,620 K.C.	Extreme High Freq. End	I, J, K, L
.000072	Antenna	1,200 K.C.	Signal Generator	J, K, L
.000072	Antenna	600 K.C.	Signal Generator	F, G, H
.000072	Antenna	1,200 K.C.	Signal Generator	J, K, L