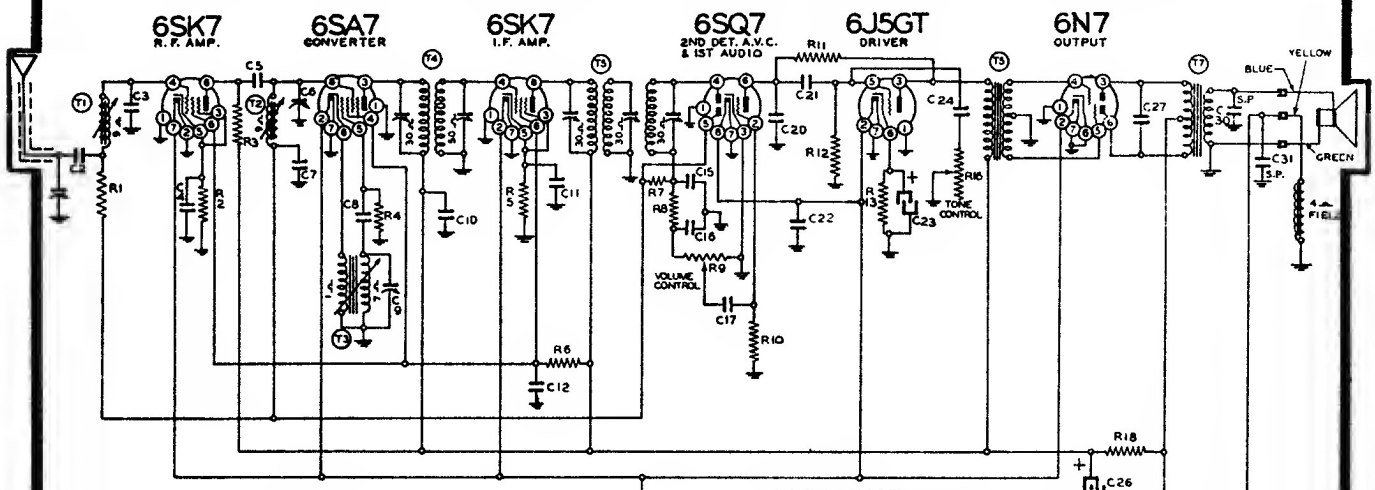

RESISTORS

R1	130330	220M ohm—⅓ w.
R2	130332	250 ohm—⅓ w.
R3	130331	15M ohm—⅓ w.
R4	130329	47M ohm—⅓ w.
R5	13016	900 ohm—⅓ w.
R6	130196	30M ohm—1 w.
R7	13019	1 megohm—⅓ w.
R8	130329	47M ohm—⅓ w.
R9	101242	500M ohm volume control
R10	130257	5 megohm—⅓ w.
R11	130102	500M ohm—⅓ w.
R12	130102	500M ohm—⅓ w.
R13	13092	1M ohm—⅓ w.
R14	130168	100 ohm—⅓ w.
R15	130168	100 ohm—⅓ w.
R16	101245	1 megohm tone control
R17	13092	1M ohm—⅓ w.
R18	130199	1500 ohm—1 w.
R19	130328	75 ohm—⅓ w.

CONDENSERS

C1	124157	Antenna trimmer
C2	100127	.01 x 120 v.
C3	129172	.0001 ceramicon
C4	100128	.05 x 120 v.
C5	129145	.00001 ceramicon
C6	124159	R.F. trimmer
C7	100129	.02 x 120 v.
C8	129172	.0001 ceramicon
C9	124158	Oscillator trimmer
C10	1001	.1 x 400 v.
C11	100128	.05 x 120 v.
C12	10053	.25 x 400 v.
C13	10031	.5 x 120 v.
C14	115687	Spark plate
C15	129165B	.00005 mica
C16	129165B	.00005 mica
C17	100127	.01 x 120 v.
C18	10031	.5 x 120 v.
C19	10031	.5 x 120 v.
C20	12912	.00025 mica
C21	10026	.02 x 400 v.
C22	1292	.0005 mica
C23	119118	20.0 mfd. x 25 v. lytic
C24	10011	.01 x 400 v.
C25	10098	.005 x 1600 v.
C26	119118	20 mfd. x 400 v. lytic
C27	100126	.006 x 800 v.
C28	1001	.1 x 400 v.
C29	119118	20 mfd. x 400 v. lytic
C30	115710	Spark plate
C31	115710	Spark plate
C32	12912	.00025 mica

C15 and C16 are in same unit
C20 and C21 are in same unit
C23, C26 and C29 are in same unit

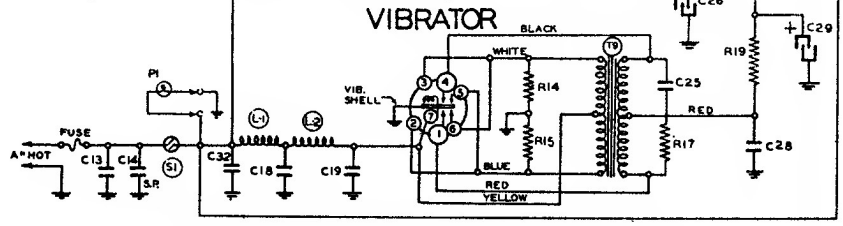

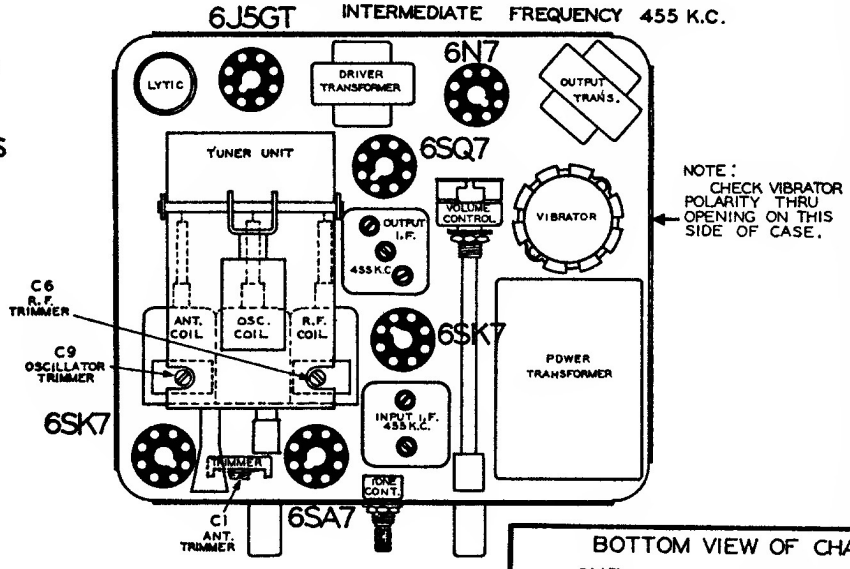

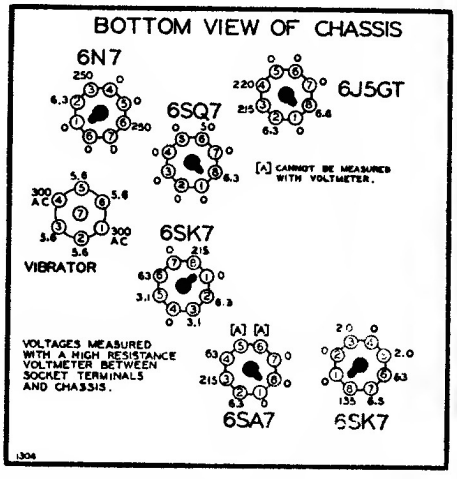

Western Auto

Truetone

MODEL D4255

(Former No. D1294)