TRUETONE MODEL D2622

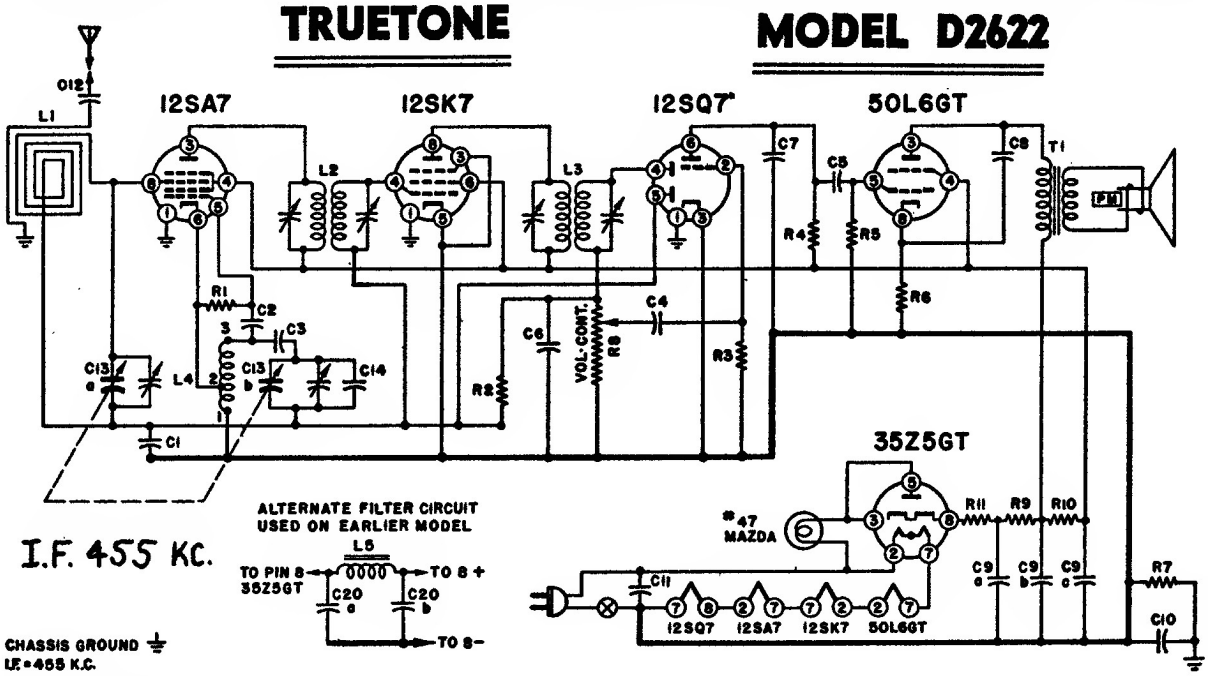

CONDENSERS

Symbol	Capacity		Type
C1	.1	mfd.	200 V.
C2	.00005	mfd.	Mica
C3	.02	mfd.	400 V.
C4	.01	mfd.	400 V.
C5	.01	mfd.	400 V.
C6	.00025	mfd.	Mica
C7	.0005	mfd.	Mica
C8	.02	mfd.	400 V.
C9a	30.	mfd.	(Elect.) 150 V.
C9b	30.	mfd.	(Elect.) 150 V.
C9c	20.	mfd.	(Elect.) 150 V.
C10	.2	mfd.	400 V.
C11	.05	mfd.	400 V.
C12	.005	mfd.	600 V.
C13a	.00042	mfd.	(max.) Var.
C13b	.00018	mfd.	(max.) Var.
C14	.00002	mfd.	Mica
C20a	30.	mfd.	(Elect.) 150 V.
C20b	50.	mfd.	(Elect.) 150 V.

RESISTORS

Symbol	Resistance		Type
R1	22,000	ohms	C½W
R2	470,000	ohms	C½W
R3	10	megohms	C½W
R4	220,000	ohms	C½W
R5	470,000	ohms	C½W
R6	150	ohms	C½W
R7	150,000	ohms	C½W
R8	1	megohm	Volume Control
R9	150	ohms	C1W
R10	1,000	ohms	C1W
R11	33	ohms	C1W

COILS

Symbol	Description
L1	Loop
L2	1st I. F. Trans.
L3	2nd I. F. Trans.
L4	Osc. Coil
L5	Choke, Filter

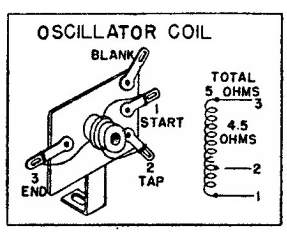

VOLTAGE DATA:—

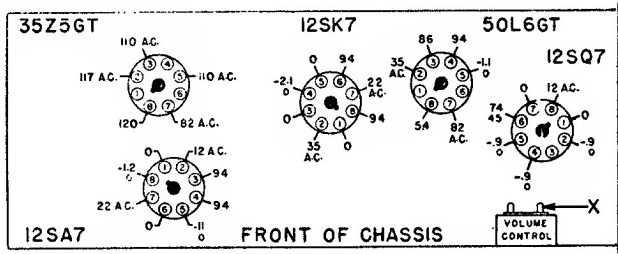

Bottom View of Chassis, Showing Voltages

All readings made between Tube Socket Terminals and Switch Lug on volume control (Point "X" on drawing).
Measured on a 117 Volt A.C. line.
Volume control full on.
Dial tuned to low frequency end, no signal.
Voltages indicated obtained on Vacuum Tube voltmeter.
A second voltage reading is shown made with a 1000 ohm-per-volt meter when use of this instrument would result in appreciably lower readings.

DIAL STRINGING AND POINTER SETTINGS:—

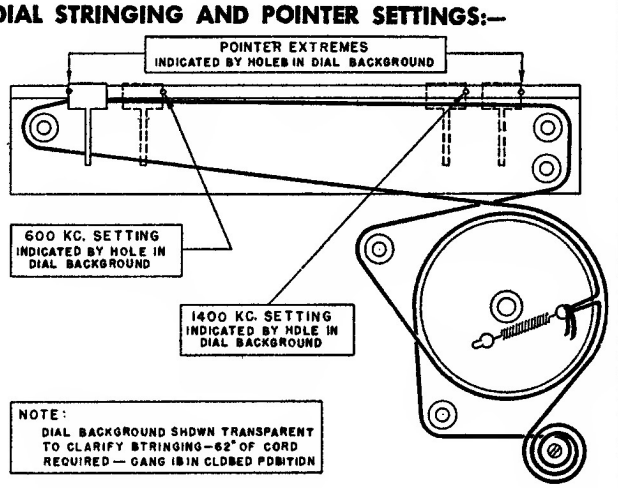

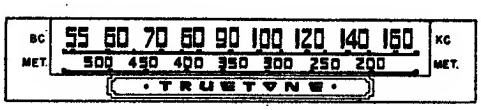

VOLUME CONTROL AND ON-OFF SWITCH

STATION SELECTOR CONTROL

MODEL D2622