tru-tone RADIO

MODEL D-2102A AND D-2103A

Factory Model 5D165

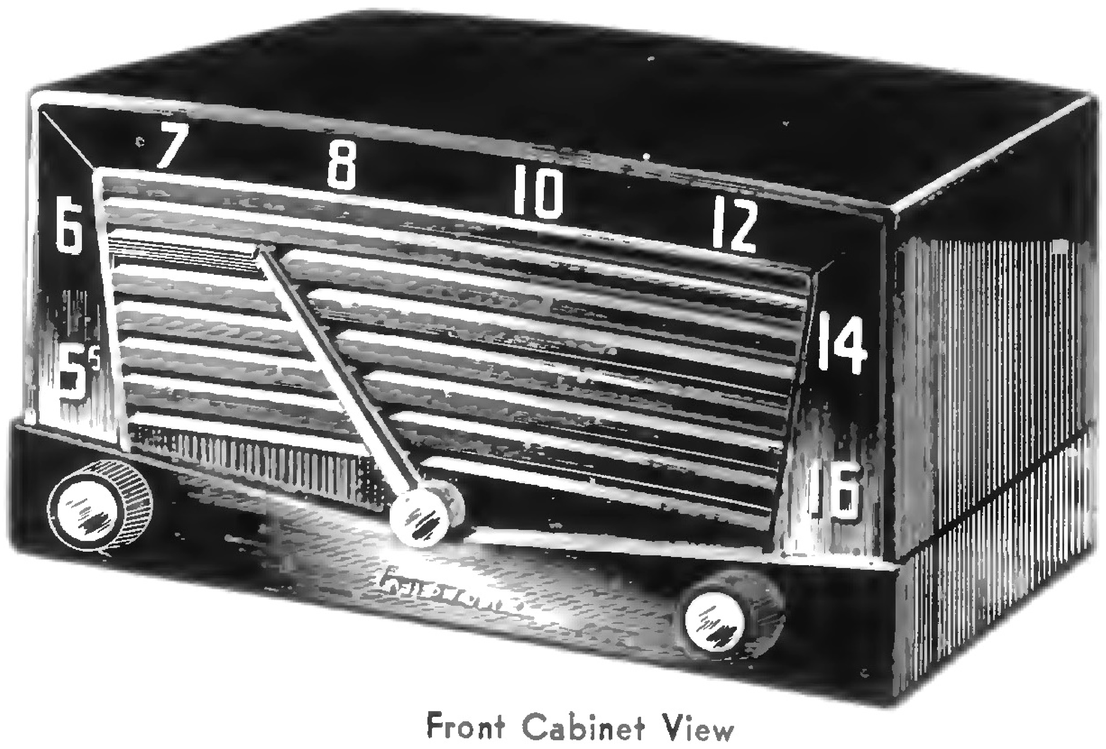

Front Cabinet View

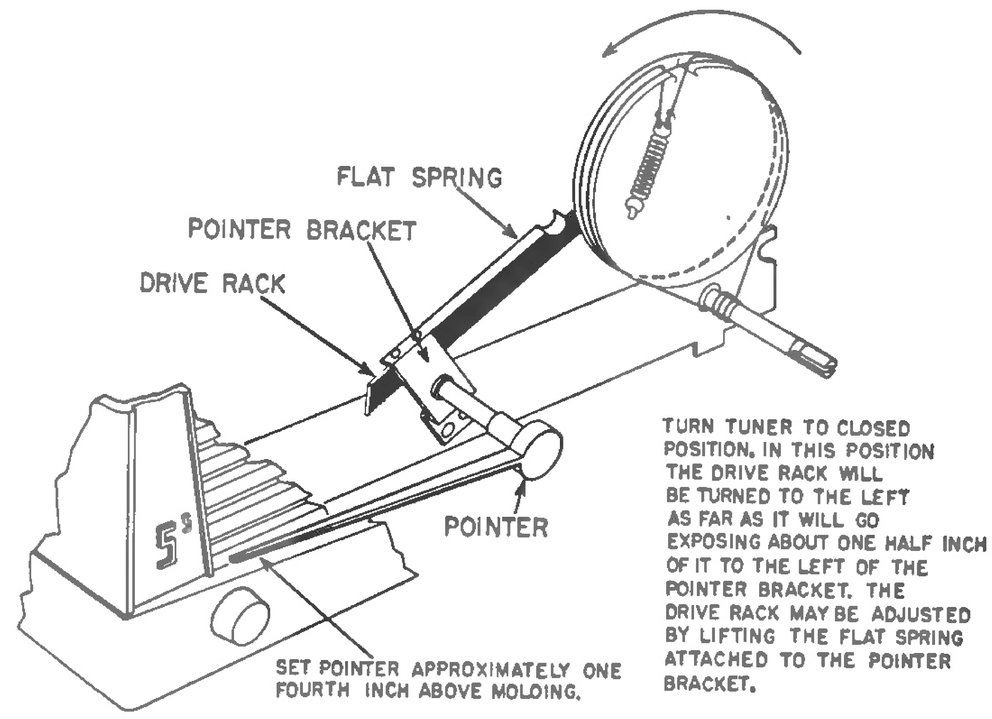

Dial Stringing Diagram

ALIGNMENT PROCEDURE

- Loop must be connected and set volume to maximum.

SIGNAL GENERATOR				TUNER SETTING	ADJUST FOR MAXIMUM OUTPUT	INPUT FOR 50-MILLIWATT OUTPUT
Frequency	Coupling Capacitor	Connection to Radio	Ground Connection			
455 kc.	.1 mf	12BE6, Pin 7	HEAVY BUSS LEAD ACROSS CENTER OF CHASSIS	Capacitor fully open (plates out of mesh)	Top and bottom Cores in output and input I.F. cans	65 microvolts
1620 kc.	.1 mf	12BE6, Pin 7		Capacitor fully open (plates out of mesh)	Oscillator trimmer C1-D on gang	70 microvolts
535 kc.	.1 mf.	12BE6, Pin 7		Capacitor fully closed	Check for adequate range	70 microvolts
1400 kc.	———	Lay generator lead near back of cabinet		Tune in 1400 kc. signal	Antenna trimmer C-1C on gang	200 to 400 microvolts
400 cycles	.1 mf	12AT6, Pin 1		———	———	.06 volts

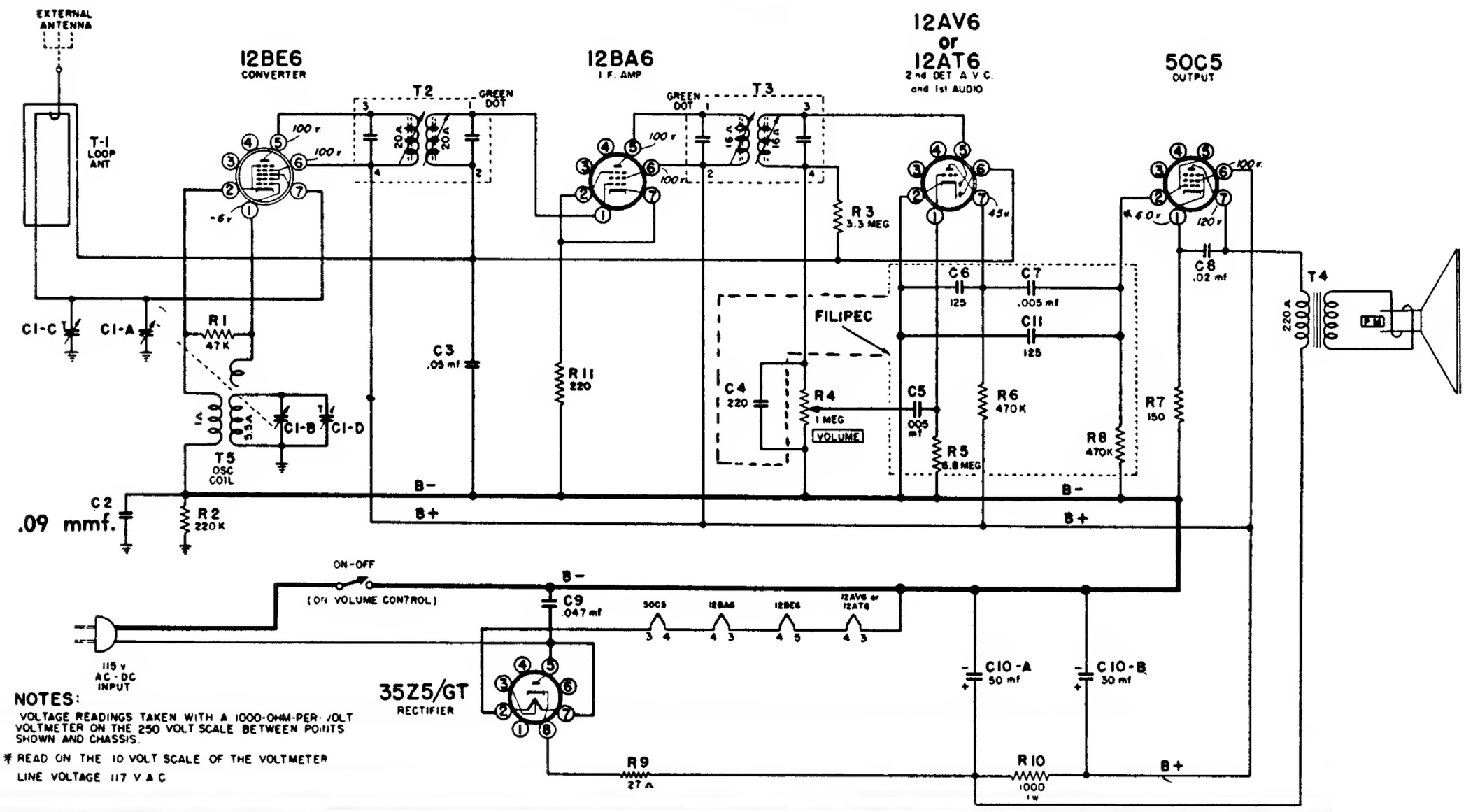

NOTES:

VOLTAGE READINGS TAKEN WITH A 1000-OHM-PER-VOLT VOLTMETER ON THE 250 VOLT SCALE BETWEEN POINTS SHOWN AND CHASSIS.

* READ ON THE 10 VOLT SCALE OF THE VOLTMETER

LINE VOLTAGE 117 V A C