Westinghouse
RADIO TELEVISION

MODELS H-125 & H-126

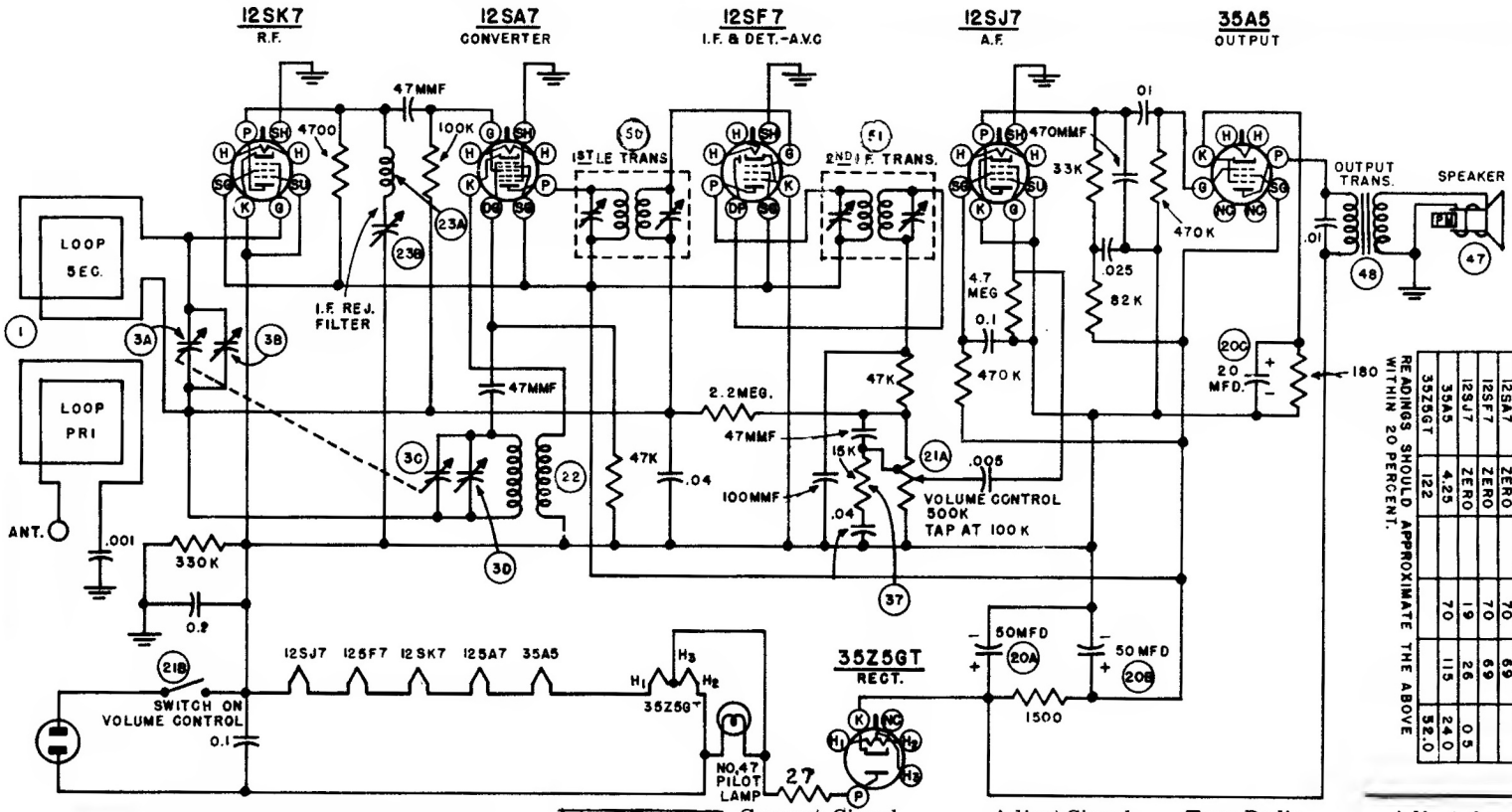

VOLTAGE AND CURRENT TABLE

ALL VOLTAGES ARE MEASURED FROM THE NEGATIVE SIDE OF THE DUAL FILTER CAPACITOR USING A 20,000 OHMS PER VOLT METER. LINE VOLTAGE IS 117 V.A.C. SIGNAL VOLTAGE IS ZERO.

TUBE	SOCKET TERMINAL K	SG	P	1k ma
12SK7	ZERO	70	31	
12SA7	ZERO	70	69	
12SF7	ZERO	70	69	
12SJ7	ZERO	19	26	0.5
35A5	4.25	70	115	24.0
35Z5GT	122			32.0

READINGS SHOULD APPROXIMATE THE ABOVE WITHIN 20 PERCENT.

INTERMEDIATE FREQUENCY : 455 KC

RESISTANCE TABLE

ITEM	PRIMARY OHMS	SECONDARY OHMS	REMARKS
1		2	
22	$\frac{1}{2}$	7	
23A	50		
50	27	26	
51	27	23	
47		2.95	VOICE COIL DISCONNECTED
48	375	$\frac{3}{4}$	VOICE COIL DISCONNECTED

Steps	Connect Signal Generator to—	Adjust Signal Generator to—	Tune Radio Dial to—	Adjust for Maximum Output
1	12SF7 grid in series with a .01 mfd. capacitor	455 kc	quiet point near 1600 kc.	primary and secondary 2nd i-f transformer
2	12SA7 grid in series with a .01 mfd. capacitor	455 kc	quiet point near 1600 kc.	primary and secondary 1st i-f transformer
3	12SA7 grid in series with a .01 mfd. capacitor	455 kc	quiet point near 1600 kc.	repeat 1 and 2
4	antenna terminal	455 kc	600 kc	adjust i-f rejection trimmer for minimum
5	antenna terminal in series with a 50 mmfd. capacitor	1615 kc	gang at minimum	oscillator trimmer
6	radiated signal from signal generator	1400 kc	1400 kc	adjust antenna trimmer

Westinghouse
RADIO TELEVISION