MODELS 5D811 CHASSIS 5E01

Zenith Radio Corp.
(Model 5D810, Chassis 5E02 is similar to Model 5D811, Chassis 5E01 shown here.)

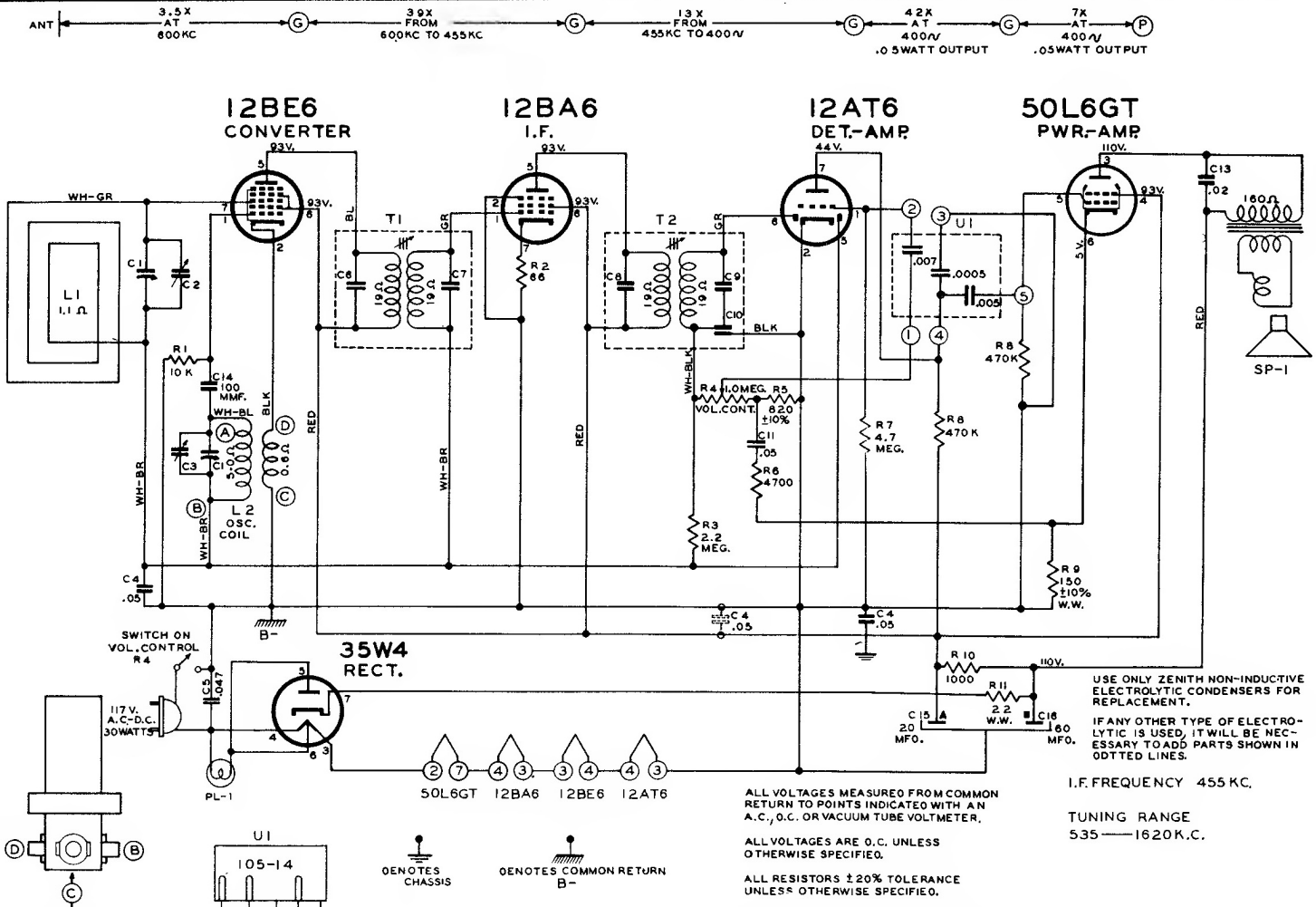

ALIGNMENT PROCEDURE
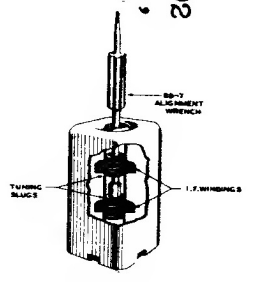
OPERATION	CONNECT OSCILLATOR TO	DUMMY ANTENNA	INPUT SIG. FREQUENCY	SET DIAL AT	TRIMMERS	PURPOSE
1	Converter Grid	.5 Mfd.	455 Kc.	600 Kc.	Adjust Primary & Secondary Slugs	For I. F. Alignment
2	One Turn Loop Coupled Loosely to Wave Magnet	--	1600 Kc.	1600 Kc.	C-3	Set Oscillator to Dial Scale.
3		--	1400 Kc.	1400 Kc.	C-2	Align Antenna Stage