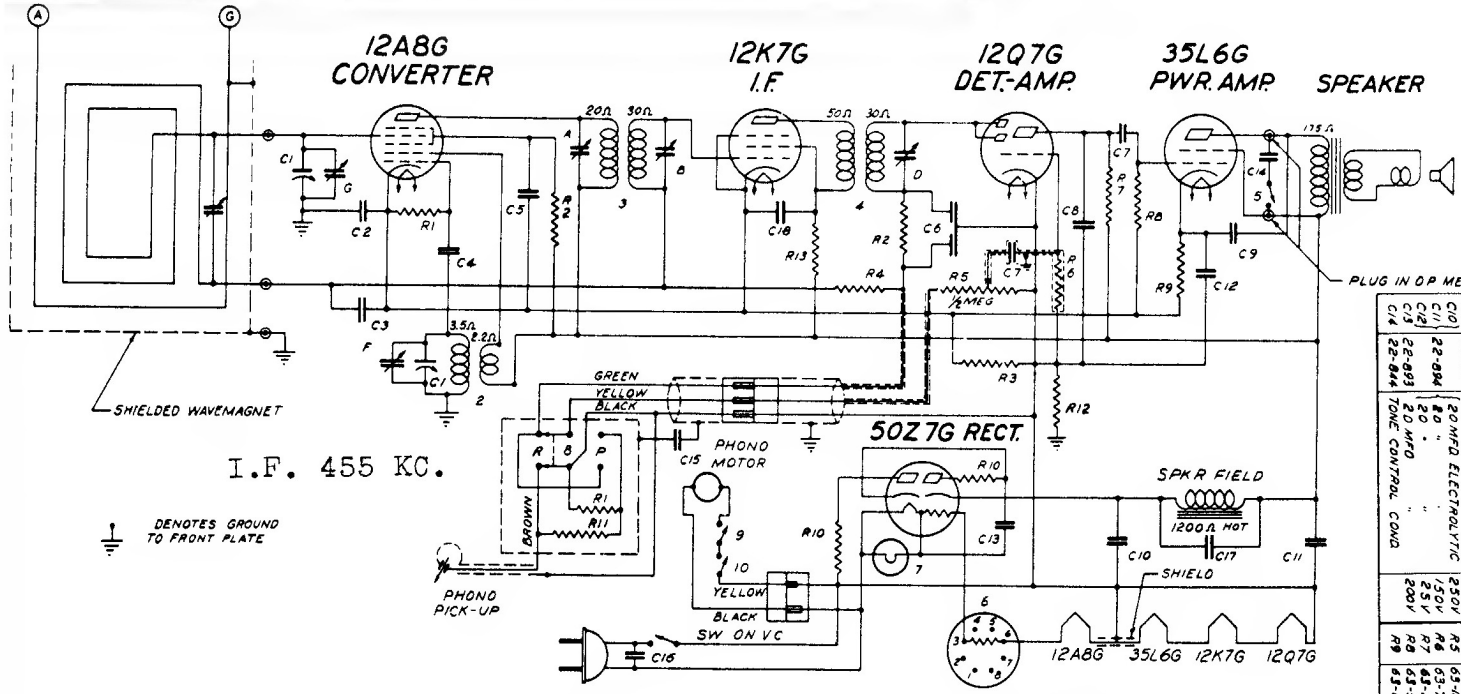

DIAG. No.	PART No.	DESCRIPTION
C1	22-865	TWO-GANG VARIABLE
C2	22-938	8 MFD.
C3	22-250	.05 MFD.
C4		100 MMFD.
C5	22-841	.02 MFD
C6		DUAL 100 MMFD
C7	22-837	.01 MFD
C8	22-833	.0005 MFD
C9	22-836	.03 MFD
C10		20 MFD ELECTROLYTIC
C11	22-894	8.0 " "
C12		20 " "
C13		20 MFD " "
C14	22-893	TONE CONTROL COND.
C15	22-844	

DIAG. No.	PART No.	DESCRIPTION	
C15	22-165	.01 MFD	300V
C16	22-875	.15 MFD	400V
C17	22-980	.04 MFD	400V
C18	22-212	.05 MFD	400V
R1	63-713	47 M OHM	¼ W
R2	63-593	47 M OHM	¼ W
R3	63-572	1.5 OHM	¼ W
R4	63-600	2.2 MEGOHM	¼ W
R5	63-028	VOLUME CONTROL	½ W
R6	63-724	47 MEGOHM	½ W
R7	63-296	220 M OHM	¼ W
R8	63-597	470 M OHM	¼ W
R9	63-686	150 OHM WIREWOUND	½ W

DIAG. No.	PART No.	DESCRIPTION	
R10	63-023	22 OHM WIREWOUND	½ W
R11	63-719	470 M OHM	¼ W
R12	63-717	220 M OHM	¼ W
R13	63-683	1000 OHM	¼ W
1		WAVEMAGNET ASSEMBLY	
2	56901	OSC COIL	
3	58902	1ST I.F. TRANS	"
4	56903	2ND I.F. TRANS	"
5	MS 517	TONE CONTROL SWITCH	
6	100-79	BALLAST TUBE	
7	100-39	PILOT LIGHT 2.5V 0.17A	
8	65-192	PHONO SWITCH	

NOTE

All voltages measured with a 1000 ohm per volt meter from chassis to socket contact indicated.

All voltages are positive D.C. unless marked otherwise.

Volume control on full.

Line voltage 120 A.C.

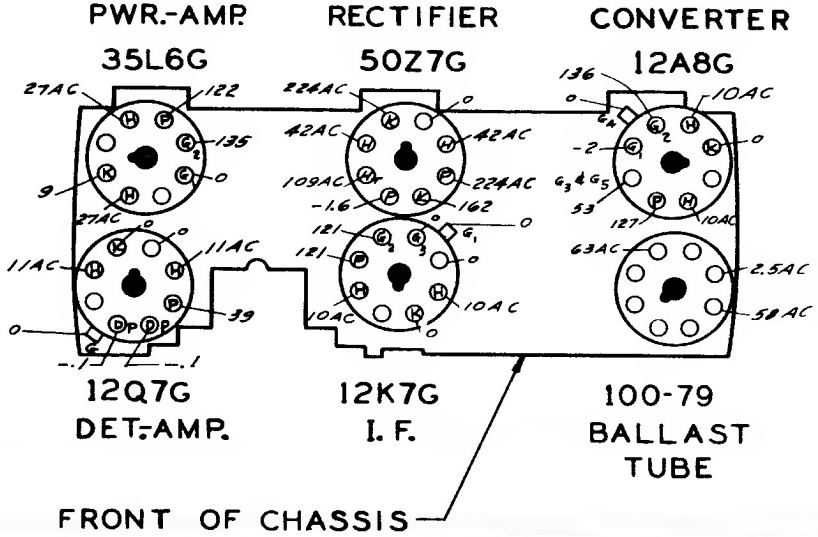

ZENITH RADIO CORPORATION

Model 6R481

Chassis No. 5675