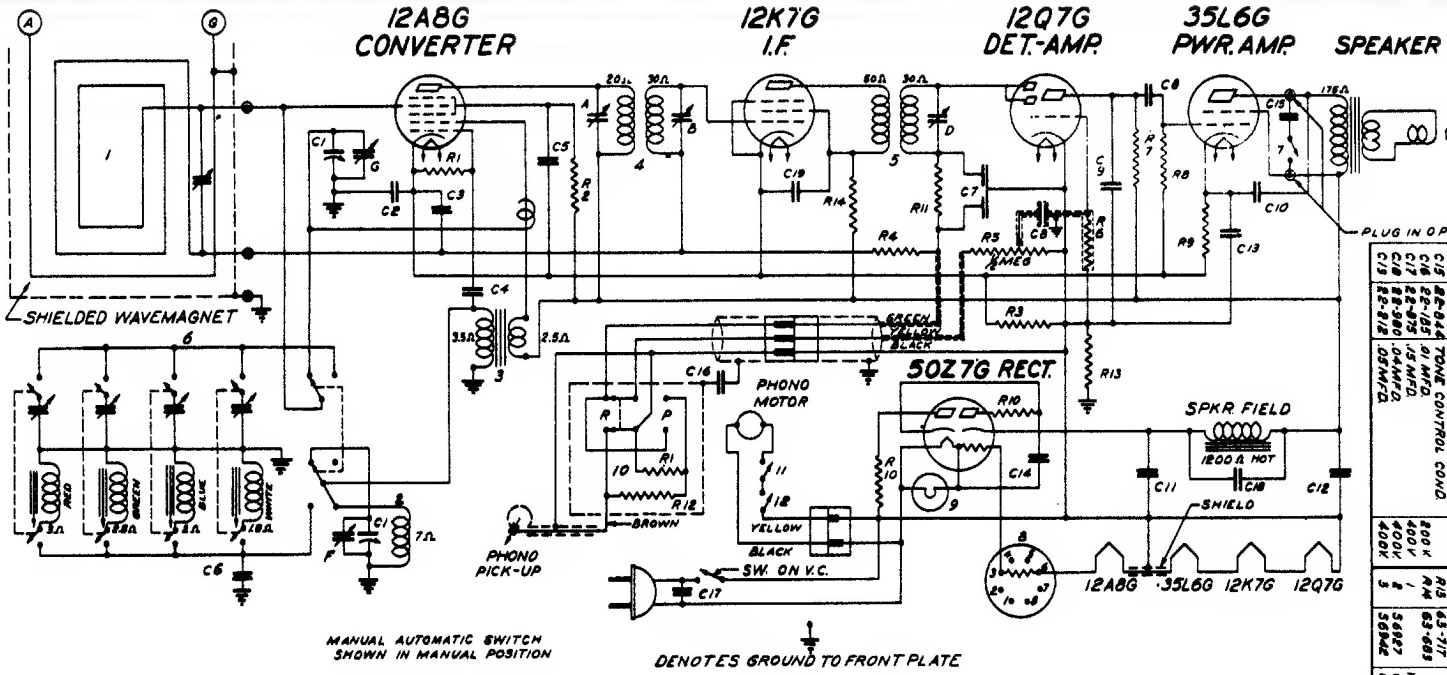

DIAG. NO.	PART NO.	DESCRIPTION
C1	22-885	TWO-GANG VARIABLE
C2	22-838	.8 MFD.
C3	22-250	.05 MFD.
C4		100 MMFD.
C5	22-841	.02 MFD.
C6	22-868	COMPENSATING COND.
C7		DUAL 100 MMFD.
C8	22-837	.01 MFD.
C9	22-833	.0005 MFD.
C10	22-836	.03 MFD.
C11		20 MFD. ELECTROLYTIC
C12	22-894	20 " "
C13		20 " "
C14	22-833	20 " "
C15	22-844	TONE CONTROL COND.
C16	22-844	.01 MFD.
C17	22-875	.15 MFD.
C18	22-185	.01 MFD.
C19	22-900	.04 MFD.
C19	22-812	.05 MFD.

DIAG. NO.	PART NO.	DESCRIPTION
R1	63-719	47M OHM
R2	63-591	22M OHM
R3	63-572	15 OHM
R4	63-560	2.2 MEGOHM
R5	63-1028	VOLUME CONTROL
R6	63-724	47 MEGOHM
R7	63-290	220 M OHM
R8	63-597	470 M OHM
R9	63-606	150 OHM WIREWOUND
R10	63-1023	22 OHM
R11	63-593	47 M OHM
R12	63-719	470 M OHM
R13	63-717	220 M OHM
R14	63-683	1000 OHM
1		WAVEMAGNET ASSEMBLY
2	56942	OSCILLATOR COIL ASSEM.
3	56942	OSC. COUPLER COIL ASSEM.

DIAG. NO.	PART NO.	DESCRIPTION
4	56902	1st I.F. TRANS ASSEMBLY
5	56903	2nd I.F. TRANS. "
6	56997	AUTOMATIC TUNING UNIT ASSEM
7	MS-517	TONE CONTROL SWITCH
8	100-79	BALLAST TUBE
9	100-39	PILOT LIGHT BULB 2.9 V .17 A
10	85-192	PHONO SWITCH
11	85-181	AUTOMATIC STOP SWITCH
12	85-181	A.C. SWITCH
A		1st I.F. TRANS PRI.
B		1st I.F. " SEC.
C		2nd I.F. " SEC.
D		BROADCAST OSC. (ON BAND)
F		ANTENNA BROADCAST (ON BAND)
G		

I.F. FREQUENCY 455KC
6 TUBE SUPERHETERODYNE
VOLTAGE DOUBLER A.C.
CHASSIS Nº5672-P
ZENITH RADIO CORPORATION
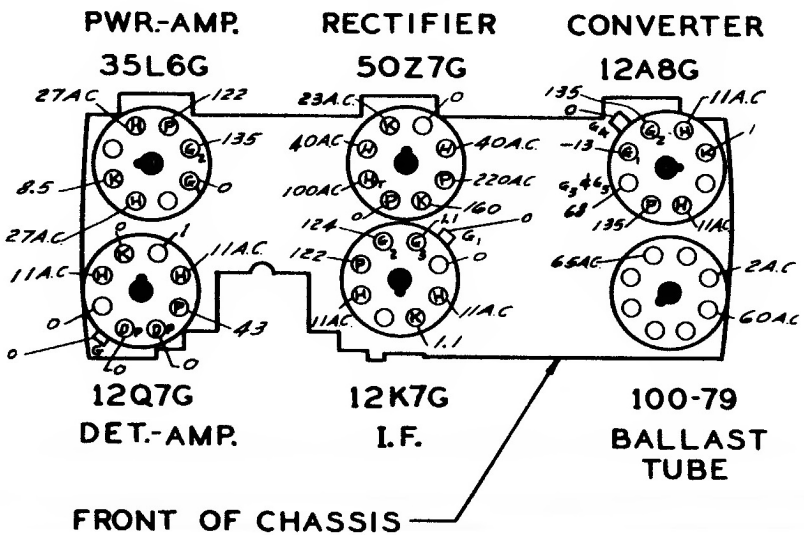
Model 6R485
Chassis No. 5672P