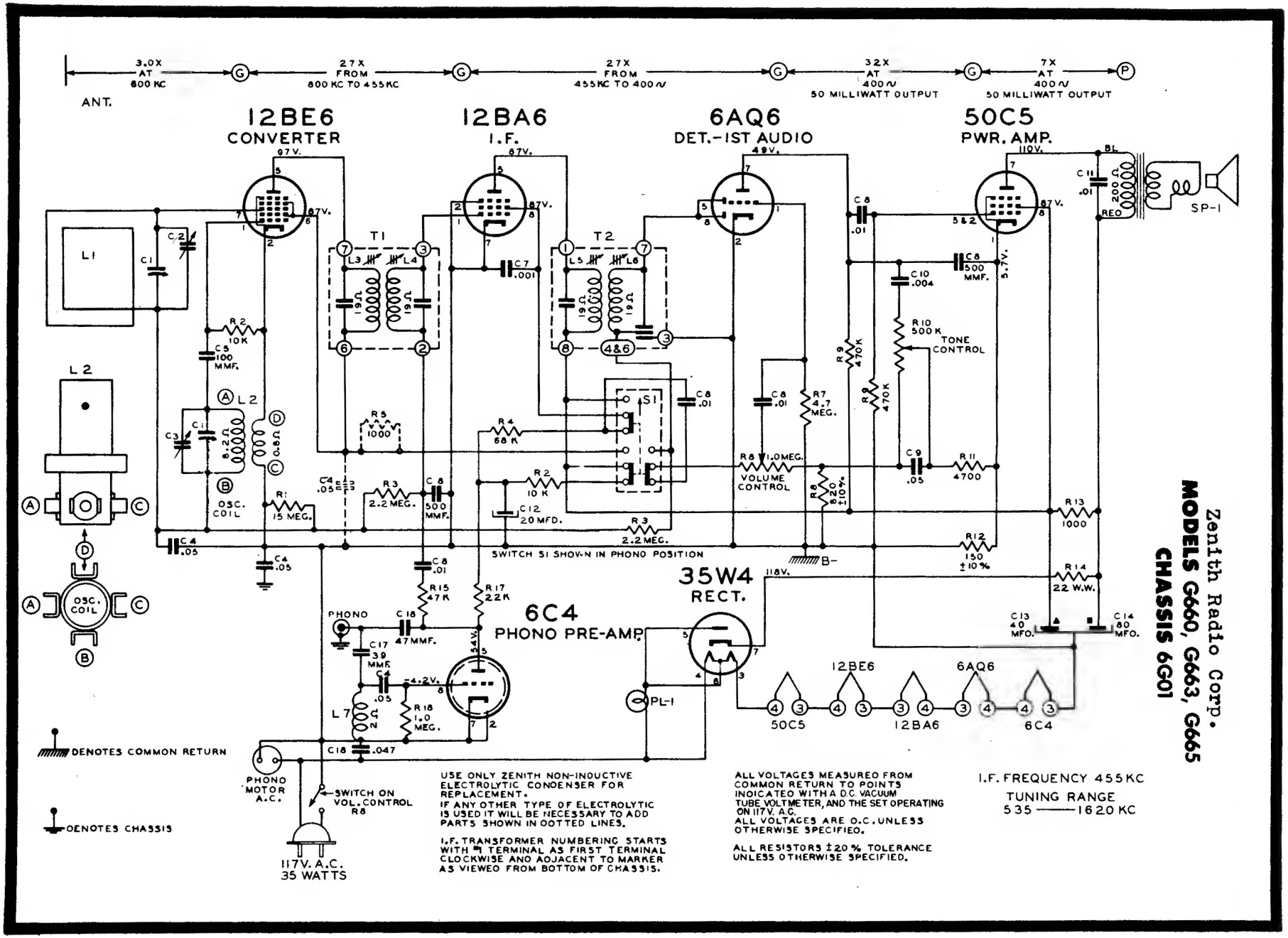
3.0X AT 800 KC
27X FROM 800 KC TO 455 KC
27X FROM 455 KC TO 400 ~
32X AT 400 ~ 50 MILLIWATT OUTPUT
7X AT 400 ~ 50 MILLIWATT OUTPUT
ANT.
12BE6 CONVERTER
12BA6 I.F.
6AQ6 DET.-1ST AUDIO
50C5 PWR. AMP.
SP-1
L1
L2
T1
T2
S1
SWITCH S1 SHOWN IN PHONO POSITION
TONE CONTROL
VOLUME CONTROL
OSC. COIL
PHONO
6C4 PHONO PRE-AMP.
35W4 RECT.
PL-1
B-
12BE6
6AQ6
50C5
12BA6
6C4
DENOTES COMMON RETURN
DENOTES CHASSIS
PHONO MOTOR A.C.
SWITCH ON VOL. CONTROL R8
117V. A.C. 35 WATTS
USE ONLY ZENITH NON-INDUCTIVE ELECTROLYTIC CONDENSER FOR REPLACEMENT.
IF ANY OTHER TYPE OF ELECTROLYTIC IS USED IT WILL BE NECESSARY TO ADD PARTS SHOWN IN DOTTED LINES.
I.F. TRANSFORMER NUMBERING STARTS WITH #1 TERMINAL AS FIRST TERMINAL CLOCKWISE AND ADJACENT TO MARKER AS VIEWED FROM BOTTOM OF CHASSIS.
ALL VOLTAGES MEASURED FROM COMMON RETURN TO POINTS INDICATED WITH A D.C. VACUUM TUBE VOLTMETER, AND THE SET OPERATING ON 117V. A.C.
ALL VOLTAGES ARE D.C. UNLESS OTHERWISE SPECIFIED.
ALL RESISTORS ±20% TOLERANCE UNLESS OTHERWISE SPECIFIED.
I.F. FREQUENCY 455 KC
TUNING RANGE 535 — 1620 KC
Zenith Radio Corp.
MODELS G660, G663, G665
CHASSIS 6G01